CompAir

BAC User Instruction Manual

MAKO

Document No. - 150BAC Global-000

MAKO Compressors, LLC
1634 SW 17th Street
Ocala, Florida 34471
Phone: +1-352-732-2268
Fax: +1-352-351-5211
E-mail: email@compairmako.com
Web Site: www.compairmako.com/

CompAir UK Ltd.
Reavell House
53-56 - White House Rd.
Ipswich
Suffolk
IP15PB
England
Phone: 011-44-1473-242000
www.compair.com/Products/High_Pressure_Pistons--
Breathing_Air_Compressors.aspx#Mako
e-mail: sales@compair.com

GENERAL INFORMATION.

These units are for compressing and purifying atmospheric air for use in Self Contained Breathing Apparatus (SCBA) or Self Contained Underwater Breathing Apparatus (SCUBA) and are not suitable for compressing any other gasses. They are designed and manufactured to give optimum performance with long life and reliability.

This manual gives the end user all the information required to install and operate this unit and carry out regularly scheduled maintenance to ensure the maximum satisfactory service life.

Servicing facilities and the supply of genuine MAKO replacement parts are provided through a worldwide network of MAKO Distributors. If replacement parts are needed, the user should first contact the local MAKO Distributor. If there is any difficulty contacting a local distributor the end user may contact the MAKO factory representative.

The information given in this manual was correct at the time of it's creation. However, as part of continuous development, modifications to parts and procedures may be made without notice that could affect the maintenance requirements of this unit. Before any maintenance work is undertaken the user is advised to contact the local MAKO Distributor who is supplied with revised and up-dated information.

In any communication concerning these units it is essential to quote the MODEL, SERIAL NUMBER and the YEAR of MANUFACTURE. This information is located on the units' nameplate. (see Fig. 1.3-1)

Throughout this manual all pressures quoted are gauge pressures unless otherwise stated.

Manual Configuration

This manual is broken down by numbered chapters, sections and subsections shown in bold text and separated by periods.

(Chapter #).(Section #).(subsection #).(subsection #)

4.3.2.1 would represent subsection 1 of subsection 2 of section 3 of chapter 4

There can be as many subsections as are needed.

Within this structure could be **headings** in bold which are not numbered.

The pages are designated by chapter and page separated by a dash.

(Chapter #)-(Page number within that chapter)

4-3 would indicate the third page of chapter four.

All illustrations are designated by chapter, section and subsection to which they are associated followed by the number of the illustration separated by a dash

fig.(chapter and section designation)-(number of the illustration within the section indicated)

fig. 4.3.2.1-3 would indicate the third illustration within section **4.3.2.1**

Maintenance

To ensure the continued trouble-free operation of this unit it is important that periodic maintenance and servicing is carried out in accordance with the information given in the 'Maintenance' section of this manual. To assist in this matter your local MAKO Distributor can provide a number of optional maintenance agreements to suit your requirements. These agreements provide the end user with the expertise of our factory trained technicians and the guarantee that only Genuine MAKO parts will be used.

Warranty

The conditions of the MAKO Warranty are set out in the Company's standard Conditions of Sale available from the MAKO Distributor supplying the unit.

USE ONLY GENUINE MAKO PARTS. YOUR WARRANTY COULD BE AFFECTED IF ANY SERVICE OR REPAIR IS CARRIED OUT USING ANYTHING BUT GENUINE MAKO PARTS.

1634 SW 17th Street
Ocala, Florida 34471
United States of America

Telephone +1 352-732-2268
Facsimile +1 352-732-7873

www.compairmako.com

Mako is part of the
CompAir. Group

DECLARATION OF CONFORMITY

Applicant:

CompAir USA Inc.
1634 SW 17th Street
Ocala, FL 34471 USA

Factory:

CompAir USA Inc.
1634 SW 17th Street
Ocala, FL 34474 USA

Machinery Description:

Compressors & High Pressure Air Equipment

Model/Type Number:	MK Series as listed:	
MK X AM	MK X AC	
MK X CI	MK X HI	MK X SC
MK X H3	MK X H5	MK X SJ
MK X H6	MK X H9	MK X MJ
MK X MK	MK X MC	MK X HI
MK X VS	MK X VI	MK X HS

I hereby declare that the machinery complies with the Essential Health and Safety Requirements of the Machinery Directive (98,37/EC) as amended and with the provisions of the Electromagnetic Compatibility Directive (89/336/EEC) as amended.

EMC Standards:

Emissions: EN61000-4:2001
Immunity: EN61000-6-2:2001

Machinery Standards:

EN ISO 12100-1,-2
EN 60204-1
EN 1050

Robert J Lang
Engineering Manager

4-13-07
Date

OCALA, FL
Location

1. Forward

1.1 Notes On The Unit

MAKO units are the result of many years of research and development. This experience combined with high quality standards guarantee the manufacture of breathing air charging systems which will provide a long service life, high reliability and cost-effective operation.

Certificate Of Conformity
This unit and its accessories as supplied by MAKO conform to the basic health and safety requirements included in the Machinery Directive 98/37/EC and the EMC Directive 89/336/EEC. The compliance with these directives is signified by the "CE mark" (See fig. 1.1-1)

fig. 1.1-1 CE

1.2 Intended Use

This unit has been constructed in accordance with state-of-the-art technology and recognized safety regulations. Nevertheless, its use may constitute a risk to life and limb of the user or third persons or cause damage to the machine or to other material property, if

- it is not used as intended,
- it is operated by unqualified personnel
- it is improperly modified or changed
- the safety regulations are not observed

Therefore, any person entrusted with the operation, maintenance or repair of this unit must read and follow all safety regulations in this manual. If required, this has to be acknowledged by signature.

in addition,
- relevant accident prevention regulations
- generally recognized safety regulations
- national safety regulations

have to be observed.

This system must be operated under technically perfect conditions and in accordance with its intended use and the instructions set out in the operating manual. This system must be operated only by safety-conscious personnel who are fully aware of the dangers involved in the operation of this system. If any functional problem is detected or suspected stop the operation of this system. Report the problem to the appropriate maintenance or service personnel. The problem must be resolved before the system is returned to operation.

Operating the unit within the limits of its intended use also involves observing the instructions set out in the operating manual and complying with the inspection and maintenance directives.

1.3 Maintenance

Carefully performed maintenance is imperative, this ensures that your unit can meet all the requirements for which it was intended. It is therefore imperative to adhere to the specified maintenance intervals and to carry out the maintenance work with deliberate care, especially when the unit is utilized under harsh operating conditions.

Servicing

Please contact your authorized MAKO distributor in the case of malfunctions or when spare parts are required. Our fully trained personnel will ensure that all repairs are carried out properly. Using only genuine MAKO spare parts. Genuine MAKO spare parts are manufactured utilizing state-of-the-art technology, thus guaranteeing the continued reliable performance of the unit.

1. Forward

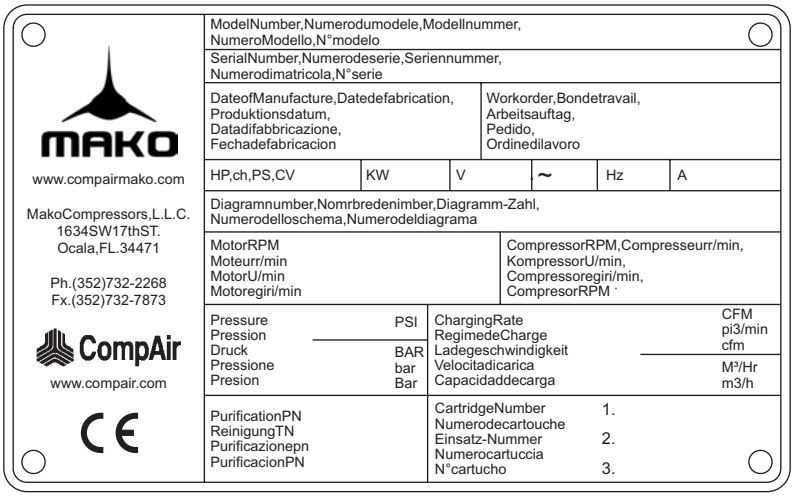

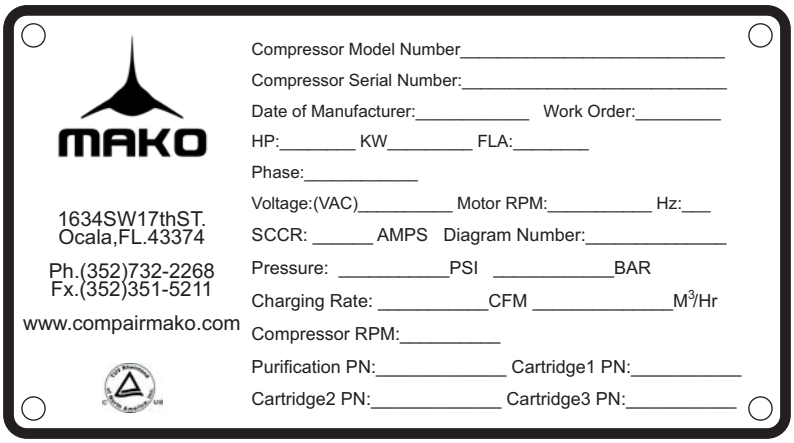

fig. 1.3-1 MAKO Nameplates

In Case Of Queries

Please enter the data on the nameplate of your unit into the nameplate shown in (fig. 1.3-1). In the case of queries or spare parts orders, please refer to the units series & type as indicated on the nameplate, the identification no. and the year of construction.

1.4 Notes

General

These operating instructions are intended to familiarize the user with the unit and its intended use. The instructions contain important notes on how to operate the unit safely and cost-effectively.

Observing these instructions will help to avoid risks, reduce repair costs, down times and to increase the reliability and service life of the unit.

The operating instructions in this manual are in addition to any applicable local, regional or national, laws, rules and regulations regarding the prevention of accidents and environmental protection. They must always be available at the location of the unit. The operating instructions must be read and followed by any person carrying out work in connection with the unit, i.e. operation, setting up, disposal of any waste and consumables, maintenance, inspection, repair, and transport.

1. Forward

Guarantee

Operate this unit only if you have an exact knowledge of the machine taking into respect these facts.

MAKO cannot be held responsible for the safe operation of the unit if it is used in a manner that does not correspond to the intended use, or for other applications which are not mentioned in this manual.

Warranty claims will not be accepted in the case of

- Operating errors
- Incorrect maintenance
- Wrong auxiliary materials
- Use of spare parts other than genuine MAKO spare parts
- Modifications and changes to the installation

The warranty and liability conditions of the general terms and conditions of MAKO will not be extended by the notes above.

Any unauthorized change to this unit, or the installation of components not accepted by the manufacturer (i.e. fine separator) will result in the withdrawal of the CE mark. As a consequence, any liability and warranty claims will not be accepted by the manufacturer.

Safety Regulations

Danger!

The safety regulations in chapter 3 of the operating instructions must be strictly observed.

Technical Changes

In the course of technical development we reserve the right to modify the units without further notice.

2. Table of Contents

General Information **0-1**
Manual Configuration 0-1
Maintenance 0-2
Warranty 0-2
Declaration Of Conformity 0-3

1. Forward **1-1**
1.1 Notes On The Unit 1-1
Certificate Of Conformity 1-1
1.2 Intended Use 1-1
1.3 Maintenance 1-1
Servicing 1-1
In Case Of Queries 1-2
1.4 Notes 1-2
General 1-2
Guarantee 1-3
Safety Regulations 1-3
Technical Changes 1-3

2. Table Of Contents **2-1**

3. Safety Regulations **3-1**
3.1 Identification Of Safety Guidelines 3-1
3.2 General Safety Instructions 3-1
Organizational Measures 3-1
Selection And Qualification Of Personnel; Basic Responsibilities 3-2
3.3 Changes And Modifications To The Unit 3-2
3.4 Installation And Normal Operation 3-2
Condensate Drain 3-3
Normal Operation 3-3
3.5 Special Work / Maintenance 3-4
Lock Out Procedure 3-4
Maintenance And Repair 3-5
3.6 Warning Of Special Dangers 3-6
Electric Energy 3-6
Gas, Dust, Steam And Smoke 3-7
Pneumatics 3-7
Noise 3-7
Oils, Greases And Other Chemical Substances 3-8
Rooms Subject To Explosion Hazards 3-8
3.7 Storage Of Compressors 3-8
3.8 Symbols And Explanations 3-9
3.9 Logs And Daily Inspection 3-12
3.9.1 Daily Log Book 3-12
Out Of Service 3-12
Daily Inspection And Log Entries 3-12
3.9.2 Maintenance Log 3-13

2. Table of Contents

4. Layout And Function 4-1
4.1 General Description 4-1
4.2 Layout 4-2
4.3 Control Panels 4-3
4.3.1 MEC Controller 4-3
4.3.2 Standard Controls & Optional CMM 4-6
4.4 Air Management Panel Layout 4-8
4.5 Main Electrical Access 4-10
4.6 Front Access 4-11
4.7 Main Service Access Door 4-12

5. Transportation And Installation 5-1
5.1 Transport 5-1
5.2 Machine Location 5-1
5.3 Power Supply 5-2
Lock Out Procedure 5-2
5.4 Reservoir Drain 5-2
5.5 Remote Air Intake Installation 5-2
5.5.1 Permanent Remote Air Intake 5-2
5.5.2 Temporary Remote Air Intake 5-5
5.6 Initial Startup Procedure 5-6

6. Operating Instructions 6-1
6.1 MEC Controller 6-1
6.1.1 Start-Up 6-1
6.1.2 Shut-Down 6-1
6.1.3 Keypad Access 6-1
6.1.4 Modifying Set Points 6-2
Setting Air Pressure 6-2
6.1.5 Maintenance Menu 6-2
6.1.6 Service Functions 6-3
6.1.6.1 Purge 6-3
6.1.6.2 Keypad Re-Code 6-3
6.1.6.3 Calibrating CO Monitor 6-3
6.1.6.4 By-Passing The CO or MO Monitors 6-4
6.1.6.5 To Cancel The CO or MO By-Pass 6-4
6.2 Standard Controls 6-5
6.2.1 Start-Up 6-5
6.2.2 Shut-Down 6-5
6.3 CMM Unit 6-6
6.3.1 Keypad Commands 6-6
6.3.2 Menu Access 6-6
6.3.3 CO Setup 6-6
6.3.3.1 CO Set Point 6-6
6.3.3.2 Cal Interval 6-7
6.3.3.3 Automatic Cal 6-7
6.3.4 Calibrate Now 6-7
6.3.5 By-Pass CO or MO Monitors 6-8

6.3 CMM Unit (continued)
6.3.5.1 To Cancel The CO or MO By-Pass · · · 6-8
6.4 Standard Fill Procedure · · · 6-9
6.4.1 Filling from Compressor · · · 6-9
6.4.2 Cascade filling From Storage · · · 6-10

7. Maintenance · · · 7-1
Lock Out Procedure · · · 7-1
7.1 Maintenance Schedule · · · 7-1
Daily or Each Time Unit is Operated · · · 7-1
Weekly · · · 7-1
7.2 Purification System Layout & Function · · · 7-2
7.3 Filter Cartridge Capacity & Replacement · · · 7-2
Capacity · · · 7-2
Replacement · · · 7-2
7.4 CO Monitor Indicator (Window Type) Maintenance · · · 7-4
7.5 Lubrication · · · 7-4
7.6 Block Details · · · 7-5

Appendices
MAKO Purification System Data Sheet for U.S. MK Models · · · APP-A
MAKO Purification System Data Sheet for FD Models · · · APP-B
Daily Log Book Sheet · · · APP-C
Maintenance Log · · · APP-D
Recommended Breathing Air Unit
Maintenance Schedule · · · APP-E
Recommended Breathing Air Unit
Block Maintenance Schedule · · · APP-F

Engineering Drawings / System Configuration Test Sheet & Registration Form / Start-up & Inspection Form

3. Safety regulations

3.1 Identification Of Safety Guidelines

MAKO is not liable for any damage or injury resulting from the non-observance of these safety instructions or negligence of the usual care and attention required during installation, handling, operation, maintenance or repair, even if this is not explicitly mentioned in these operating instructions.

If any of the regulations contained in these instructions - especially with regard to safety - does not correspond to the local legal provisions, the stricter of both shall prevail.

Danger!

Passages marked with this designation indicate a possible danger to personnel.

Important!

Passages marked with this designation indicate possible damage to unit.

Note.

Passages marked with this designation provide technical or procedural information for the optimal cost-effective use of the unit.

3.2 General Safety Instructions

Organizational Measures

The operating instructions must always be at hand at the place of operation of the unit!

In addition to the operating instructions, all other generally applicable legal and other mandatory regulations relevant to accident prevention and environmental protection must be adhered to and passed on to others! These compulsory regulations may also deal with the handling of hazardous materials or the issuing/wearing of personal protective equipment, or traffic regulations.

Instructions, including supervisory responsibility and duty of notification for taking into account in-plant factors, for example regarding work organization, sequences of operations, personnel assigned to certain tasks, are to be kept with the operating manual.

The personnel entrusted with the operation and/or maintenance of the unit must have read the operating instructions and in particular the chapter on safety regulations before starting work. Reading the instructions after work has begun is too late. This applies especially to persons working only occasionally on the machine, e.g. for setting up or maintenance.

supervisors should check on a regular basis that the personnel are carrying out the work in compliance with the operating instructions and that they are paying attention to the safety requirements!

Observe all safety and warning notices attached to the unit!

See to it that safety instructions and warnings attached to the machine are always complete and perfectly legible.

In the case of safety-relevant changes to the unit or its operating behavior, stop the unit immediately and report the fault to the responsible department or person!

Spare parts have to comply with the technical requirements specified by the manufacturer. This can always be ensured by using only genuine MAKO spare parts.

High pressure hoses have to be changed within stipulated and periodic intervals, even if no safety-relevant faults have been detected.

Adhere to prescribed intervals or those specified in the operating instructions for routine checks and inspections!

For the execution of maintenance work, tools and workshop equipment adapted to the task at hand are absolutely necessary.

The personnel must be made familiar with the location and operation of fire extinguishers! Observe all fire-warning and fire-fighting procedures!

Selection And Qualification Of Personnel; Basic Responsibilities

Work on or with the unit must be carried out by reliable personnel only. Statutory minimum age limits must be observed!

Employ only trained or instructed personnel and clearly set out the individual limits and responsibilities of the personnel for operation, set-up, maintenance and repair!

Ensure that only authorized personnel work on or with the unit!

Define the machine operator's responsibilities giving the operator the authority to refuse instructions by third persons that are contrary to safety regulations.

Do not allow persons to be trained or instructed or persons taking part in a general training course to work on or with the unit without being continuously supervised by an experienced person!

Work on the electrical equipment of the unit must be carried out only by a skilled electrician in accordance with electrical engineering rules and regulations.

Work on system elements such as high pressure hoses may only be carried out by personnel with special knowledge and experience.

3.3 Changes And Modifications To The Unit

Do not make any changes, modifications or attachments to the unit, which could affect safety, without the supplier's prior permission!

Unauthorized changes to the machine are not permitted for safety reasons.
Genuine MAKO parts were especially designed and selected for this unit. The installation and/or use of any parts other than genuine MAKO parts can therefore affect the active and/or passive safety and reliability of this unit.

The manufacturer is not liable for damage resulting from the use of non-genuine MAKO parts or special accessories. This applies also to the installation and setting of safety equipment and valves as well as to welding on structural or pressurized parts.

3.4 Installation And Normal Operation

In addition to the general technical operation in accordance with the stipulations of the local authorities, we would like to refer in particular to the following regulations.

For the lifting of this unit, a suitable lifting mechanism is to be used, which meets the local safety regulations. All loose or moveable parts must be safely secured before the unit can be lifted. It is strictly prohibited to stay in the danger zone of a lifted load.

The correct method of lifting (according to the operating instructions of the load suspension device) has to be ensured.

All blind flanges, plugs, caps and bags with drying agent have to be removed prior to the installation of the pipes. Distributing pipes and pipe connections have to be of the proper size and suitable for the relevant operating pressure.

The system has to be installed in such a way that it is adequately accessible and the required cooling is guaranteed. Never block the air intake. Make sure that the ingress of humidity via the intake air is kept to a minimum.

The air intake is to be located so that no hazardous Contaminant can be drawn in. (i.e. solvent vapor, dusts and hazardous material and flying sparks)

The air intake is to be positioned so that no loose clothing of persons can be sucked in.

The pressure line connected to the air outlet of the system must be fitted stress-free.

If a remote control is used, the system must carry a clearly visible sign with the following note:
Attention! This installation is operated by remote control and can start up without prior warning!

As an additional safety measure, persons, who start remotely controlled systems, have to take sufficient safety precautions in order to ensure that nobody is checking the system or working on it. For this, a label with a corresponding warning notice has to be attached to the remote control equipment.

The installed unit-specific safety valves only assume the pressure safeguarding function of this unit provided in currently valid standards and regulations.

Electrical connections must meet the local regulations. Power units must be connected to earth and protected from short-circuits by means of fuses.

Condensate Drain

The condensate discharge is to be disposed of in accordance with all applicable local laws, rules and regulations

Normal Operation

The system pressure of the unit can be located on the nameplate of the unit.

Take the necessary precautions to ensure that the unit is used only when in a safe and reliable state!

Operate the machine only when all protective equipment, emergency shut-off equipment, sound-proofing elements and extraction devices are in place and fully functional!

Check regularly that

- all means of protection are correctly fitted and fixed.
- all hoses and/or pipes within the system are in good condition, firmly fixed and do not chafe.
- there are no leaks (air, oil, fuel, or coolant).
- all fittings are firmly tightened.
- all wires are connected correctly and are in good condition.
- all safety valves and other pressure relief mechanisms are in good order and not blocked by e.g. dirt or paint.
- the safety mechanisms are fully functional.

If compressed air hoses are used. they must be of the proper size and suitable for the relevant operating pressure. Do not use chafed or damaged hoses.

Only use hose couplings and fittings of the right type and the correct size.

Before blowing through a hose or an air pipe ensure that the open end is positively held. A free end whips and can cause injuries.

Before loosening or disconnecting any connection ensure that it in not under pressure.

Refrain from any working method which is doubtful in terms of safety.

Never play around with compressed air from this unit!

Never aim compressed air from this unit at yourself or at any other person!

Never use compressed air from this unit to clean your clothing.

Never use compressed air from this unit to clean equipment.

Never use the machine in an environment where inflammable or poisonous vapour can be sucked in.

Never operate the system at pressures and temperatures below or above the values indicated in the technical data sheet.

All access panels, etc. have to be closed at all times during the operation of this unit.

Persons in an environment or areas in which the sound pressure is 85 dB(A) or higher have to wear ear protectors.

Check the unit at the beginning of each startup and at least once every 8 hours of operation for visible damage or problems. Report any problems or changes in the machine's operating Behavior to the responsible department or person immediately. In the case of any problem which might effect the safe operation of this unit, stop the unit immediately! Have any problem resolved before restarting the unit!

Follow the start-up and shut-down procedures according to the operating instructions.

3.5 Special Work/Maintenance

During installation, inspections, maintenance, or repairs the following lock-out procedure must be followed:

Lock Out Procedure:
1. - Announce the lock-out to other personnel.
2. - Turn off site power box to the unit.
3. - Lock site power box to the unit in the off position and place warning tag on box.
4. - Put key in your pocket.
5. - Make sure unit is clear of all personnel.
6. - Test lock-out by trying to start the unit.
7. - Complete required operations.
8. - Announce that the lock-out condition is being ended and clear the unit of all personnel.
9. - Take key out of your pocket.
10. - Unlock the power box and remove warning tag from box.
11. - Turn the power box on.
12. - Announce that the unit has power to other personnel.

Follow the adjusting, maintenance and inspection activities and schedule set out in the operating instructions, including information on the replacement of parts and equipment. These activities must only be carried out by skilled personnel, under qualified supervision.

Brief the personnel operating the unit prior to starting any special operations or maintenance work! Appoint a person to supervise the activities!

Maintenance and repair work may only be carried out under the supervision of a person who is qualified to do the work.

Oil losses result in a slippery floor. Therefore, always clean the floor and the outside of the unit prior to starting any maintenance work.

Inspection, maintenance and repair work may only be carried out with the unit being at rest and depressurized. Protective equipment to be removed for this work has to be properly refitted after completion of these activities.

The use of this unit without protective equipment is not permitted. During maintenance and repair when working on a running unit, working clothes have to be close-fitting.

Always use the correct tools for maintenance and repair work.

Never use inflammable solvents or carbon tetrachloride to clean parts. Take precautions against poisonous vapors from cleaning agents.

In any work concerning the operation, conversion or adjustment of the unit and its safety-oriented devices or any work related to maintenance, inspection and repair, always observe the start-up and shutdown procedures set out in the operating instructions and the information on maintenance work.

Ensure that the maintenance area is adequately secured.

To lower the risk of accidents, individual parts and large assemblies being moved for replacement purposes should be carefully attached to lifting tackle and secured. Use only suitable and technically correct lifting gear and only utilize suspension systems with adequate lifting capacity. Never work or stand under suspended loads!

During maintenance and when carrying out repair work, cleanliness is very important. Avoid the ingress of dirt by covering parts and free openings with a clean cloth, paper or adhesive tape.

After the completion of each repair, check that no tooling, loose parts, cloth or debris have been left in the unit.

Care must be taken any time this unit is in operation!

Maintenance And Repair

The employer has to inform the employee of the dangers possibly arising during the repair and maintenance of this unit as well as on how to avoid them; the employee has to observe all measures for safety at work. Safety equipment for the prevention or elimination of danger has to be maintained regularly and functionally checked at least once a year. Faults observed have to be immediately rectified and/or reported to the responsible person.

Use only genuine MAKO spare parts.

During installation, inspections, maintenance, or repairs the lock-out procedure must be followed. (see section 3.5)

Before removing or opening pressurized components, positively isolate any source of pressure and depressurize the entire system.

Never weld or carry out any other work requiring heat near oil systems. Pressure reservoirs or components and pipes containing oil have to be drained completely and cleaned, for example by means of a steam jet, before beginning such work.

Never weld any pressure reservoir or change it in any way.

If work which produces heat, flames or sparks has to be carried out on or near this unit, the adjacent components of this unit have to be protected by means of non inflammable material.

Before releasing this unit for operation after maintenance or overhaul check that the unit is functioning properly and the regulating, shut-down equipment and safety interlocks are working properly.

Examine the pressure tube and the pressure vibration dampers for carbon deposits every six months. Excessive deposits have to be removed.

Motor, air filter, electrical components and regulating equipment have to protected from the ingress of humidity, e.g. when cleaning the system by means of a steam jet.

Under no circumstance shall the sound-proofing material be removed or modified.

Never use etching solvents which could attack the materials used.

If indicated or if there is any suspicion that an internal part of the unit has run hot, the machine has to be shut down and the unit checked.

In order to avoid an increase in the operating temperature, check and clean the heat transfer surfaces (cooling fins, intermediate cooler, etc.) at regular intervals. Prepare a plan of the most favorable cleaning intervals for this unit.

Avoid damage to the safety valves and other pressure reducing components. Check in particular for clogging caused by paint, oil carbon or the accumulation of dust, which could deteriorate the effectiveness of these components.

Insulation or protective shielding, the temperature of which may exceed 70°C and which could be erroneously touched by the personnel, must not be removed before these parts have cooled down to room temperature.

Check the accuracy of pressure and temperature indicators at regular intervals. If the admissible tolerance limits have been exceeded, these devices must to be replaced.

Before removing or overhauling a compressor, a motor or any another equipment, ensure that all moveable parts are safely secured. After completion of repair work, always verify that no tools, loose parts or cloths have been left in or on the unit, drive motor or drive equipment. Units must be cycled several times in order to ensure that there are no mechanical faults in the machine or the drive members. Check the direction of rotation of the electric motors during first commissioning and after each modification of the electrical connections in order to prevent the compressor from being damaged.

The fastening of loads and the instructing of forklift or crane operators should be entrusted to experienced personnel only. The person giving the instructions must be within sight or voice contact with the operator.

For carrying out overhead assembly work always use specially designed or otherwise safety-orientated ladders and working platforms. Never use machine parts as a climbing aid. Wear a safety harness when carrying out maintenance work at greater heights.

Clean the machine, especially connections and threaded unions, of any traces of oil, fuel or preservatives before carrying out maintenance or repair work! Never use aggressive detergents! Use lint-free cleaning rags!

Before cleaning the machine with water or steam jet (high pressure cleaner) or other cleaning agents, initiate an electrical lock-out procedure(see section 3.5), cover all openings which have to be protected from the ingress of water, steam or detergents for safety and/or functional reasons, in particular electric motors and switch cabinets.

After cleaning, remove all covers and masking completely and allow the unit to dry before returning unit to service!

Always re-tighten screwed connections which have been loosened for maintenance and repair work.

If the set-up, maintenance or repairs require the removal of safety equipment, this equipment has to be replaced and checked immediately after these activities.

Ensure that consumables and replacement parts are disposed of in a safe and environmentally friendly manner in accordance with all applicable local, regional and national laws, rules and regulations.

3.6 Warning Of Special Dangers

Electric energy

Use only genuine MAKO fuses with the specified current rating. Switch off the machine/unit immediately if trouble occurs in the electric system.

Work on the electrical system or equipment must only be carried out by a skilled electrician or by specially instructed personnel under the control and supervision of such an electrician and in line with the relevant electrical engineering rules.

If regulations require, the power supply to parts of machines and plants on which inspection, maintenance and repair work is to be carried out must be cut off. Before starting any work, check the de-energized parts for the presence of power and ground or short-circuit them in addition to insulating adjacent live parts and elements.

The electrical equipment of this unit is to be inspected and checked at regular intervals. Defects such as loose connections or scorched cables must be rectified immediately.

Necessary work on live parts and elements must be carried out in the presence of a second person who can cut off the power supply in case of danger by operating the emergency shutdown or main power switch. Secure the working area with a red-and-white safety chain and a warning sign. Use insulated tools only.

Before starting work on high-voltage assemblies and after having cut out the power supply, the feeder cable must be grounded, and components, such as capacitors, short-circuited with a grounding rod.

Gas, Dust, Steam And Smoke

Carry out welding, flame-cutting and grinding work on the machine/unit only if this has been expressly authorized, as there may be a risk of explosion and fire.

Before carrying out welding, flame-cutting and grinding operations, clean the machine/unit and its surroundings from dust and other inflammable substances and make sure that the premises are adequately ventilated (risk of explosion)!

Adhere to the regulations valid for the place of operation!

Observe any existing national regulation if work is to be carried out in small rooms.

Pneumatics

Work on high pressure air equipment must only be carried out by persons with special knowledge and experience of high pressure air systems.

Check all lines, hoses and threaded connections regularly for leaks and obvious damage. Damage must be Repaired immediately. High pressure air may cause serious injury or death.

Depressurize all system sections, pressure pipes, tubing and hoses which are to be removed in accordance with the specific instructions for the assemblies concerned before carrying out any repair work.

Compressed-air lines must be laid and fitted properly. Ensure that no connections are exchanged. The fittings, lengths and quality of hoses must comply with the technical requirements.

Noise

Sound-proofing elements on the unit have to be active during operation. See section 4.1 for the noise levels of this unit.
Wear personal ear protection as prescribed.

Noise, even at a low level, can cause nervousness and annoyance; over a longer period of time, our nervous system can suffer serious damage. We therefore recommend a separate machine room in order to keep the noise of the machine away from the workshop.

Depending on the number of machines in a machine room, the noise can be quite loud. In accordance with the sound pressure level at manned posts, the following precautions have to be taken:

- Below 70 dB(A): no special measures

- Above 70 dB(A): persons who stay permanently in this room have to wear ear protectors

- Below 85 dB(A): in the case of occasional visitors who stay in this room only for a short while, no special precautions are to be taken

- Above 85 dB(A): hazardous noise zone! A warning sign has to be attached to each entrance indicating that everybody who enters the room, even for a short time only, has to wear ear protectors.

- Above 95 dB(A): the warning signs have to contain the recommendation that occasional visitors also have to wear ear protectors.

- Above 105 dB(A): special ear protectors, which are suitable for the noise level and the spectral composition of the noise must be available. A corresponding warning sign must be fixed to each entrance door.

Take care that the noise transmission through walls and frames does not result in too high a noise level in the surrounding areas.

Oils, Greases And Other Chemical Substances

When handling oils, greases and other chemical substances, observe the safety regulations for this product!

Be careful when handling hot fuels and consumables (danger of burning or scalding)!

Rooms Subject To Explosion Hazards

Danger !

Units must never be operated in areas subject to explosion hazards!

(Exception: Special units with the corresponding technical modifications)

3.7 Storage Of Compressors

All units are protected against corrosion at the factory for transport and for brief storage before commissioning.

If the units are to be stored for period exceeding six months before commissioning, additional precautions must be taken by qualified service personnel.

Units which have been commissioned must be run continuously for a minimum of 1 hour once a week.

Units which are not run continuously for a minimum of 1 hour once a week require additional precautions to be taken by qualified service personnel.

Note.

The following conditions must be taken into account for storage of this unit.

The unit should be stored in a dry building which should be heated if possible.

This is particularly true during the months of winter.

If there is a risk that the temperature will fall or rise above the limits of -10C to +65C (14F to 149F) , the electrical controller must be removed and stored in ambient temperatures of+5C to +30C (41F to 86F).

Before commissioning the compressor all the electrical and electronic components and units should be checked for the ingress of water or condensation.

3.8 Symbols And Explanations

The Following Symbols may be used on the unit.

fig. 3.8-1
Warning, Fan, Cutting Danger

fig. 3.8-2
No Access for Unauthorized Personnel

fig. 3.8-3
Warning, Automatic Start-Up, May Start Without Warning.

fig. 3.8-4
Warning, Electrical Shock or Electrocution

fig. 3.8-5
Warning, Pressurized Bottle

fig. 3.8-6
Warning, Hot Surface

fig. 3.8-7
Read Operators Manual before continuing

fig. 3.8-8
Read Technical Manual before continuing

fig. 3.8-9
Warning! See the User Instruction Manual for specific hazzards associated with this unit.
See the section of the users manual associated with this area of this unit for specific hazzards associated with this area.

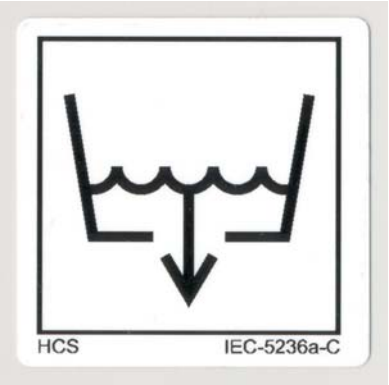

fig. 3.8-10
Drain

fig. 3.8-11
Forklift, Left Most Lift Point

fig. 3.8-12
Forklift, Right Most Lift Point

fig. 3.8-13
Warning, Hand Entanglement, Belt Drive

fig. 3.8-14
Warning, Release of Pressure

fig. 3.8-15
Warning, Skin Puncture Danger

fig. 3.8-16
Lock-Out Procedure Required

fig. 3.8-17
Hearing Protection Required

fig. 3.8-18
Eye Protection Required

fig. 3.8-19
Check Oil Level before each Start-Up

3.9 Logs And Daily Inspections

MAKO Supplies two log sheets. The first is a daily log sheet, appendix-D, used by Operator. Make additional copies and create a daily log book. The second is a maintenance log sheet maintained by the service personnel. Keep both logs with the unit at all times.

3.9.1 Daily Log Book

The daily log book should be checked each and every time before the unit is turned on.

Out of service

After any shut down or perceived problem unit must be taken out of service and "Out Of Service" must be written in daily log.

Do not try and restart unit until problem is resolved.

Report any such shut-down or problem to appropriate service personnel.

After problem is solved unit is put back in service, the solution is documented, initialed and dated in the daily log.

Daily Inspection & log Entries

1. - Check that no one has taken the unit out of service.

2. - After the unit is determined to be in service, **Do not start the unit**, enter the date in the daily log and begin your inspections.

3. - Check the oil level of the compressor and engine. If oil is milky take unit out of service and report this to service personnel.

Check Oil levels regularly during continuous use.

Top off oil levels as necessary.

The compressor can not use the same oil as the engine.

Use only Genuine MAKO Compressor oil in the compressor. (see section 7.5)

Oil for the engine is per engine manufacturers recommendations.

Check for oil leaks and walk around unit and look for problems.

Check Auto Drain Reservoir and empty as necessary.

If any problems are found that could effect the safe operation of the unit take the unit out of service and report to service personnel.

Document any actions taken in daily log.

After unit has been approved for service place check in "Oil Level-Leaks" column and continue.

4. - Check the ambient air quality at the air intake and surrounding area. If the air quality is not acceptable take the unit out of service. If the air quality is acceptable place a check mark in the "Ambient Air Quality" column and continue.

5. - Record the hours reading on the unit. MEC Controller: it will be necessary to press the main on / off button (#2 on fig. 6.1-1) to view the hours run off the MEC display.

Compare hours run on unit and current date against the "Maintenance Log" and against the due hour and date of the next filter change and oil change (see section 7.3 for information on filter changes and section 7.5 for information on oil changes)

Note overdue maintenance, filter change or oil change and take the unit out of service.

Report the overdue service to service personnel.

Report maintenance, filter change or oil change coming due to service personnel.

After it has been determined that no maintenance, filter change or oil change are overdue place a check in the "Maintenance/Filter" column and continue.

6. - Close all access doors. All access panels must be in place.

7. - Place Your initials in the operator column.

8. - Unit can now be started.

9. - Listen and look for air leaks. If an air leak is detected take the unit out of service. Report leak to the service personnel.

Danger!

High pressure air leaks can be very dangerous.

Document any actions, alarms, concerns or observations in the "Alarms and Comments" column. (i.e. topped off compressor oil.)

When the unit is shut down record the hours reading in the "Hours Start/Stop" column.

3.9.2 Maintenance Log

The maintenance log is intended to be filled out and signed by the maintenance and service personnel When the service is completed.

4. Layout and function

fig. 4.1-1

4.1 General Description

The Mako Breathing Air Center "BAC" (See Fig. 4.1-1) incorporates all functions required to safely supply high pressure breathing air that meets or exceeds CGA Grade E criteria. These functions include:

1. - Delivery of high pressure air to the purification subsystem at a temperature only slightly above the ambient air temperature (Max. Ambient air temperature 113°F or 45°C) (approximately 18°F or 10°C above ambient)

Air leaving the last stage separator contains some compressor oil carryover and moisture. Moisture content is a function of pressure and air temperature at the last stage separator.

2. - Reduction of the moisture content and impurity levels in the air stream issuing from the last stage separator to CGA Grade "E" criteria by adsorption, chemical reaction, and filtration in the purification subsystem.

3. - The regulation and control of high pressure breathing air from storage or directly from the compressor system to preclude SCBA / SCUBA over pressurization.

4. - The flexibility to control multiple banks of storage to allow the efficient filling of bottles through the use of a cascade filling procedure.

5. - The ability to monitor and control the filling of mobile storage units.

6. - The strength to protect personnel in the event of a catastrophic failure of a SCBA / SCUBA tank in the process of being filled in the containment station.

Danger!

Do not use system for any application other than for breathing air system

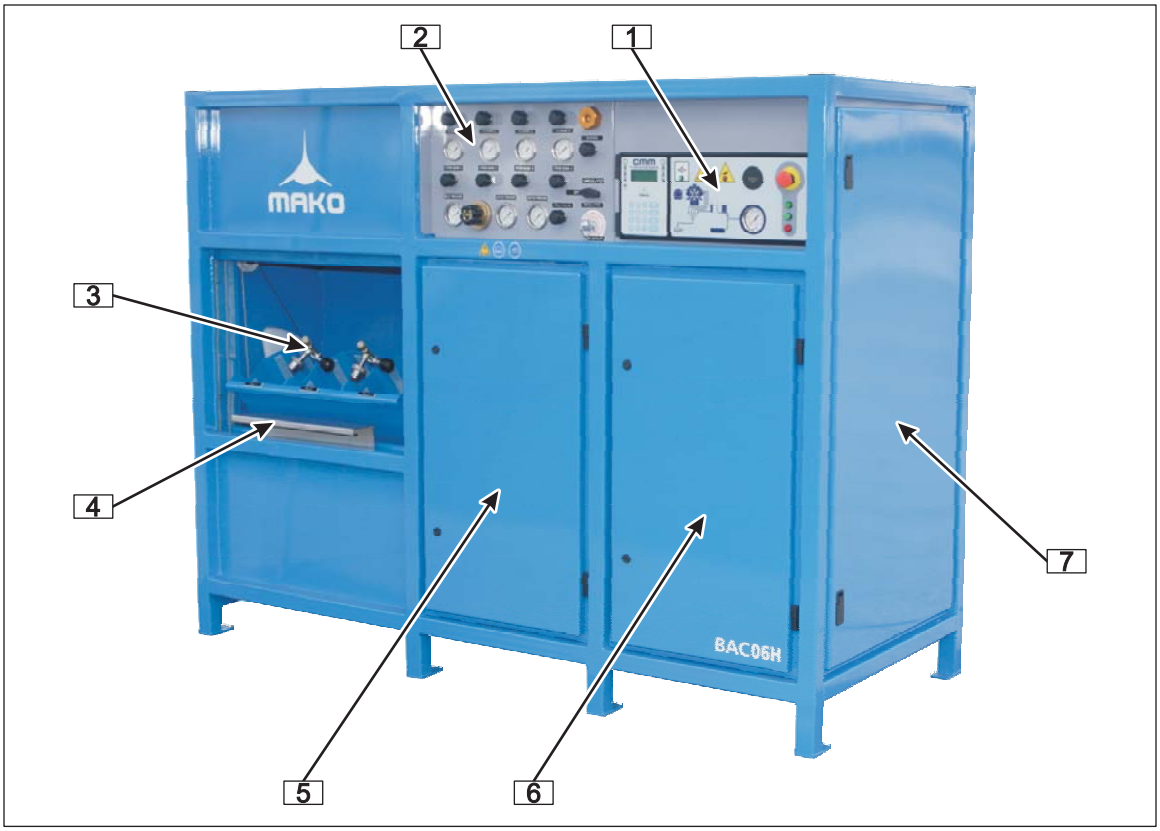

fig. 4.2-1 Overall View

4.2 Layout

1. - Control Panel - Standard Controller with optional CMM System is shown. (see section 4.3.1 for MEC controller or section 4.3.2 for standard controls and optional CMM)

2. - Air Management Panel - 4 bank cascade with single regulator shown (see section 4.4)

3. - Fill Hose - each fill Hose consists of a flexible high pressure hose with a standard bottle connection a shutoff valve and a bleed valve. (see fig. 4.2-2)

4. - Containment Fill Station Access Handle - With door closed push handle down to open fill station. With door open pull handle up to close fill station.

5. - Main Electrical Access Door - To be accessed by authorised service personnel only (see section 4.5)

6. - Front Access Door - (see section 4.6)

7. - Main Service Access Door - (see section 4.7)

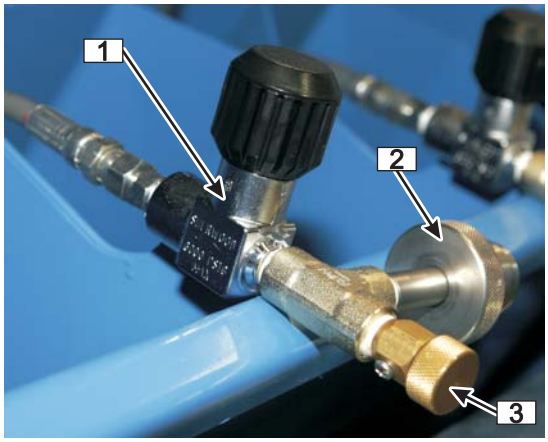

fig. 4.2-2 Fill Whip

1. - Fill Hose Valve - These valves will make it possible to use individual fill hoses.

2. - Fill Hose Bottle Connection - These standard connections will correspond to the style and pressure rating of the bottle it is designed to fill.

3. - Fill Hose Bleed Valve.

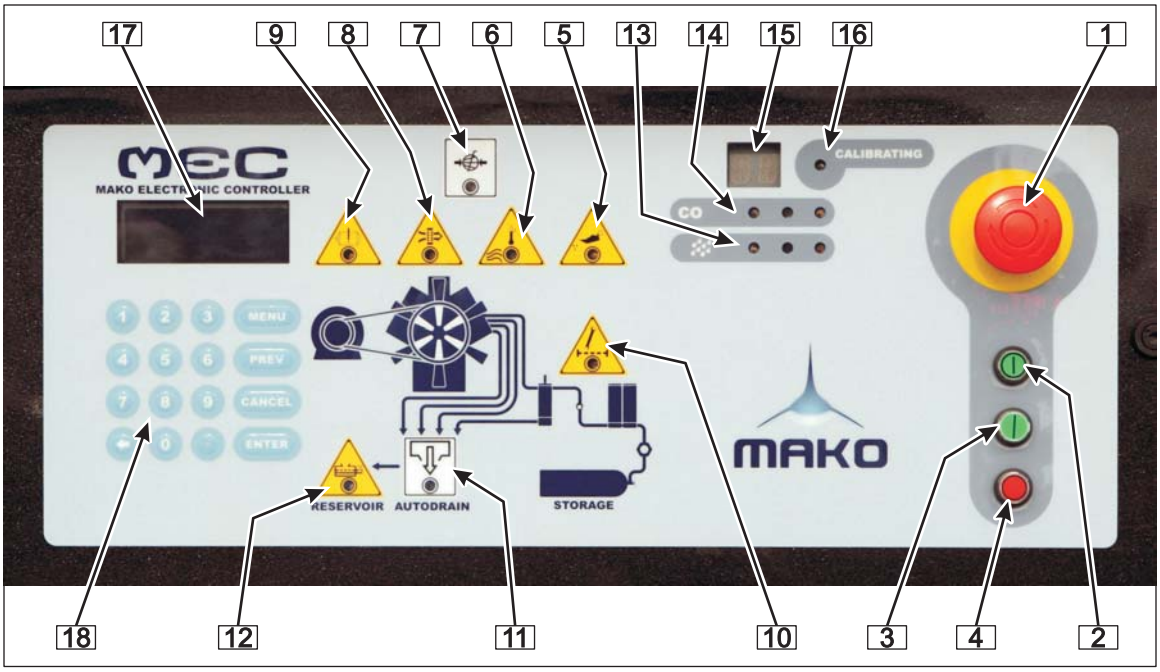

fig. 4.3.1-1

4.3 Control Panels

4.3.1 MEC Controller

1. - Emergency Stop - Pushing the emergency stop button will instantly disconnect the power from the compressor and all electronics. Turn emergency stop button clockwise to reset, before the unit can be restarted.

2. - MEC On / Off Button - Press this button to turn on the MEC Controller this button will light up green as long as the MEC is on. Press this button again to turn off.

3. - Compressor On Button - Press this button to enable the compressor, it will light up green. Controller will start the compressor. If the compressor shuts down for any abnormal reason an alert message will be shown on the display #17. Take the unit out of service. (see section 3.9.1)

4. - Compressor Off Button - When this button is pressed the MEC controller will stop or not restart the compressor. It will light up (RED) when pressed if the MEC controller is turned on. If an alarm condition exists this button will silence the alarm but will not clear the alert message from the display.

5. - Oil Pressure Low - (RED) indicates oil pressure was low for more than 30 seconds. Compressor Will Shut Down. Take the unit out of service. (see section 3.9.1)

6. - Air Temperature High - (RED) Indicates air temperature is to high for safe operation of the unit. Compressor Will Shut Down. Take the unit out of service. (see section 3.9.1)

7. - High Air - (GREEN) Indicates the air pressure has reached the high set point and has shut down. The light will turn off and the compressor will restart when the air pressure at the outlet of the unit has dropped to the low set point of the unit.

Important !

A "popping" relief valve is a indication of excessive pressure in the system.
Shut off the compressor and contact your authorized service personnel.
DO NOT set the relief valve to a higher pressure as this will void the warranty and may permanently damage the unit.

8. - Inlet Filter Dirty - (RED) Indicates the inlet air filter is dirty and it is time to clean it or change it. The compressor will shut down. Take the unit out of service. (see section 3.9.1)

9. - Motor Overload - (RED) Indicates the motor has experienced an overload. The compressor will shut down. Take the unit out of service. (see section 3.9.1)

10. - No Filter - (RED) Indicates there is no filter in the purification chamber. Take the unit out of service. (see section 3.9.1)

11. - Auto-Drain On - (GREEN) Indicates the auto drain valve is activated. Valve should close in approximately 7 seconds.

12. - Condensate Reservoir Full - (RED) Indicates that condensate reservoir is full and it is time to drain the condensate and oil from the condensate reservoir. The compressor will shut down. The system can not be reset or run until reservoir is drained. Handle waste in accordance with all local safety and environmental laws or regulations.

13. - Moisture Level Monitor - This is an optional feature and will operate like this.
Green light = air is indicated to be within established safe limits.
Yellow Light = air is indicated to be within established safe limits but is within 10% of the upper safe limit. There is approximately 1 hour of continuous use between yellow warning and red shutdown.
Red Light = air is indicated to be beyond established safe limits. Compressor will shut down and display an alarm message. Take the unit out of service. (see section 3.9.1)

Danger!

Do not try to use this unit until this issue is resolved.

14. - Carbon Monoxide Level Monitor - This is an optional feature and will operate like this.
Green light = air is indicated to be within established safe limits if the unit has been properly calibrated.
Yellow Light = air is indicated to be safe but is within 50% of the upper safe limit. This condition should be looked into and the condition corrected soon.
Red Light = air is indicated to be beyond established safe limits. Compressor will shut down and display an alarm message. Take the unit out of service. (see section 3.9.1)

Danger!

Do not try to use this unit until this issue is resolved.

15. - This display will show what monitoring systems have been installed in this unit.
Off - display is not turned on = neither the carbon monoxide nor the moisture monitors have been installed.
CO is displayed = the electronic carbon monoxide monitoring system has been installed.
MS is displayed = the electronic moisture monitoring system has been installed.
CM is displayed = both the electronic carbon monoxide and the moisture monitoring systems have been installed.

If your unit does not have either one or both of these systems and you would like to have either or both of them added please contact your local MAKO distributor for more information.

16. - Calibration - (Blue)Indicates the unit is in the process of calibrating the electronic CO monitor. The unit may not be used until the calibration process has been completed.

17. - Display - This display will provide information, warnings and menu options needed by the operator, maintenance and service personnel.

The main Screen will show the pressure in the purification chambers of the system it will typically maintain 2400 psi (165 bar) for the 06, 07, 08 & 09 blocks or 1900 psi (131 bar) for the 04, 05 & 05E blocks even when the system is off, the block is depressurized and system outlet is vented. This pressure is maintained in the purification system to preserve the purification medium. When the pressure on the display is higher than the maintained pressures shown above, the pressure shown on the display will be the same as the system outlet pressure.

18. - Keypad - This keypad will allow the maintenance and service personnel to collect data, navigate through menu options and change settings.

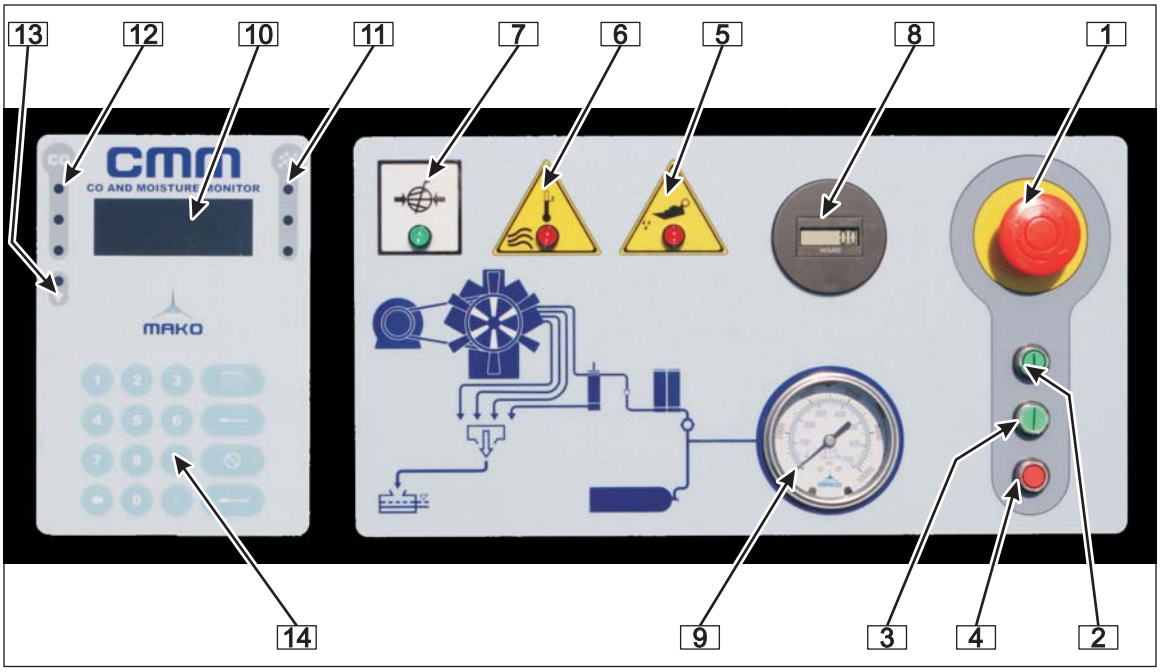

fig. 4.3.2-1

4.3.2 Standard Controls & Optional CMM

Reference numbers 1 thru 9 are all part of the standard controls. Reference numbers 10 thru 14 are all part of the optional CMM (CO and Moisture Monitor) unit.

1. - Emergency Stop - Pushing the emergency stop button will instantly disconnect the power from the compressor and all electronics. Turn emergency stop button clockwise to reset, before the unit can be restarted.

2. - CMM On / Off Button - Press this button to turn on the CMM monitoring unit this button will light up green as long as the CMM unit is on. Press this button again to turn off the CMM monitoring unit.

3. - Compressor On Button - Press this button to start the compressor, it will light up green. If the compressor shuts down for any abnormal reason take the unit out of service. (see section 3.9.1) Do not try to restart the unit until the cause of the shut down has been resolved.

4. - Compressor Off Button - (RED) When this button is pressed the compressor will stop or not restart.

5. - Oil Pressure Low - (RED) indicates oil pressure was low for more than 30 seconds. Compressor Will Shut Down. Take the unit out of service. (see section 3.9.1)

6. - Air Temperature High - (RED) Indicates air temperature is to high for safe operation of the unit. Compressor Will Shut Down. Take the unit out of service. (see section 3.9.1)

7. - High Air - (GREEN) Indicates the air pressure has reached the high set point and the compressor has shut down. The light will turn off and the compressor will restart when the air pressure has dropped to the low set point of the unit.

Important !

A "popping" relief valve is a indication of excessive pressure in the system.
Shut off the compressor and contact your authorized service personnel.
DO NOT set the relief valve to a higher pressure as this will void the warranty and may permanently damage the unit.

8. - Hour Meter - The hour meter will record the number of hours the compressor has run.

9. - Purification System Pressure Gauge - This gauge will read the pressure in the purification chambers of the system it will typically maintain 2400 psi (165 bar) for the 06, 07, 08 & 09 blocks or 1900 psi (131 bar) for the 04, 05 & 05E blocks even when the system is off, the block is depressurized and system outlet is vented. This pressure is maintained in the purification system to preserve the purification medium. When the pressure on the gauge is higher than the maintained pressures shown above, the pressure shown on the gauge will be the same as the system outlet pressure.

If the CMM electronic carbon monoxide monitoring system has not been installed on your unit the carbon monoxide levels will have to be monitored from a window type carbon monoxide monitor which will be mounted behind the front access panel and above the main electrical enclosure (see section 4.4 #5)

NOTE.

The CMM unit is optional. Reference numbers 10 thru 14 are all part of the CMM unit.

10. - Display - This display will provide information, warnings and menu options needed by the operator, maintenance and service personnel.

11. - Moisture Level Indicator - This is an optional feature on the CMM unit and if purchased and installed will operate as follows.
Green light = air is indicated to be within established safe limits.
Yellow Light = air is indicated to be safe but is within 10% of the upper safe limits. This condition should be looked into and the condition corrected soon. There is approximately 1 hour of continuous use between yellow warning and red shutdown.
Red Light = air is indicated to be beyond established safe limits. Compressor will shut down and display an alarm message on the display. Take the unit out of service. (see section 3.9.1)

Danger!

Do not try to use this unit until this issue is resolved.

12. - Carbon Monoxide Level Indicator - This is a standard feature of the CMM unit and will operate as follows.
Green light = air is indicated to be within established safe limits if the unit has been properly calibrated.
Yellow Light = air is indicated to be safe but is within 50% of the upper safe limits. This condition should be looked into and the condition corrected soon.
Red Light = air is indicated to be beyond established safe limits. Compressor will shut down and display an alarm message. Take the unit out of service. (see section 3.9.1)

Danger!

Do not try to use this unit until this issue is resolved.

13. - Calibrating - This light indicates the unit is in the process of calibrating the electronic CO monitor. The unit may not be used until the calibration process has been completed.

14. - Keypad - This keypad will allow the maintenance and service personnel to navigate through menu options and change settings. (see section 6.3.1)

NOTE.

If you do not have the CMM (CO and Moisture Monitoring) unit and would like to please contact your local MAKO distributor for more information.

fig. 4.4-1 Air Management Panel

4.4 Air Management Panel Layout

1. - * To Bank - These valves control the flow between the compressor and the individual Banks.

2. - * Bank Pressure - These gauges will give you the pressure in each individual Bank.

3. - * From Bank - These valves control the flow between the individual banks and the rest of the Air Management Panel.

* - Cascade fill panels may be setup for up to 4 Banks.

4. - Inlet Pressure - This Gauge will read the pressure at the inlet of the Regulator [#5].

5. - Regulator - This devise can be set to reduce the storage or compressor pressure to the proper fill pressure.

6. - Outlet Pressure - This Gauge will read the pressure at the outlet of the Regulator [#5].

7. - Bottle Pressure - This Gauge will read the pressure going to the bottle(s) in the Containment Shield Box Drawer(see section 4.2 - #4).

8. - Fill Valve - This Valve will control the flow of air going to the bottle(s) in the Containment Shield Box Drawer(see section 4.2 - #4).

9. - Auxiliary Outlet - This connection will allow this unit to be connected to a secondary fill station or be used to fill other storage or as a air sample test port.

10. - Auxiliary Outlet Control - This valve controls the flow of air to the Auxiliary Outlet connection.
- Off
- Unregulated with full system pressure
- Regulated - pressure controlled by Regulator [#5]

11. - Bypass - This valve can Bypass all storage and connect the inlet of the Regulator [#5] directly to the compressor.

12. - Window Type CO MO Indicator - View Indicator through window.(see fig. 4.4-2)

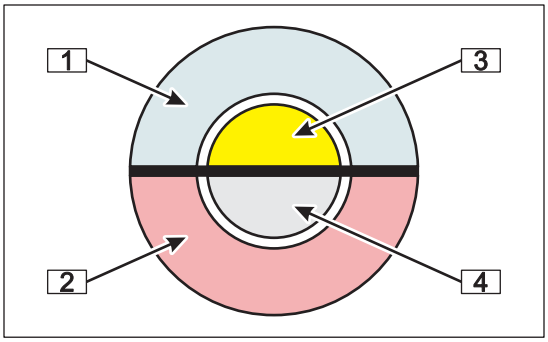

fig. 4.4-2 CO / MO Indicator

1. - MO Indicator Ring - (Blue) Safe conditions.

2. - MO Indicator Ring - (Pink) Unsafe conditions. Relative humidity greater than 40%.

3. - CO Indicator Disk - (Yellow) Safe conditions.

4. - CO Indicator Disk - (Brown/Black) Unsafe conditions. CO content greater than 50ppm.
(see section 7.4 for maintenance info.)

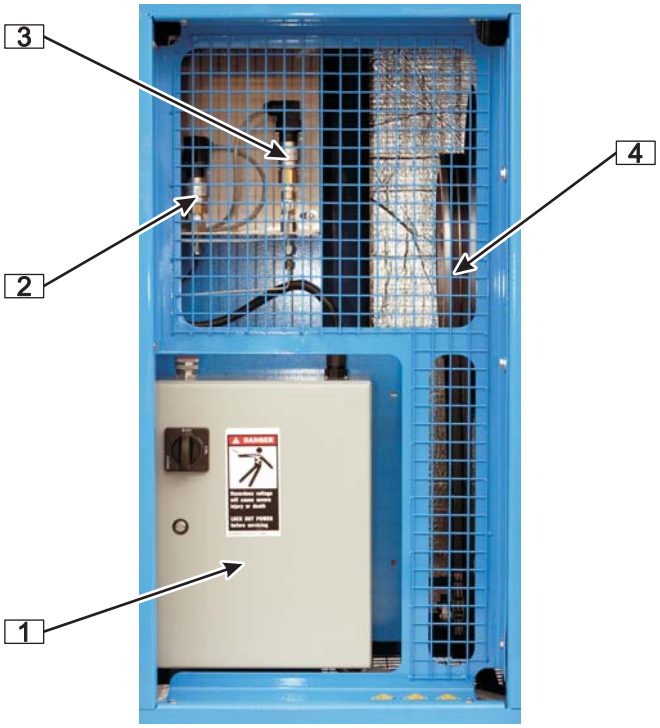

fig. 4.5-1

4.5 Main Electrical Access

1. - Main Electrical Box - This box contains high voltage electrical shock hazzard even if the unit is turned off. **Do Not Open** to be serviced by trained personnel only.

2. - Oil Pressure Switch - on 06 and larger Compressor Blocks

3. - Air Pressure Switch

4. - Motor Compressor Belt Drive Assy.

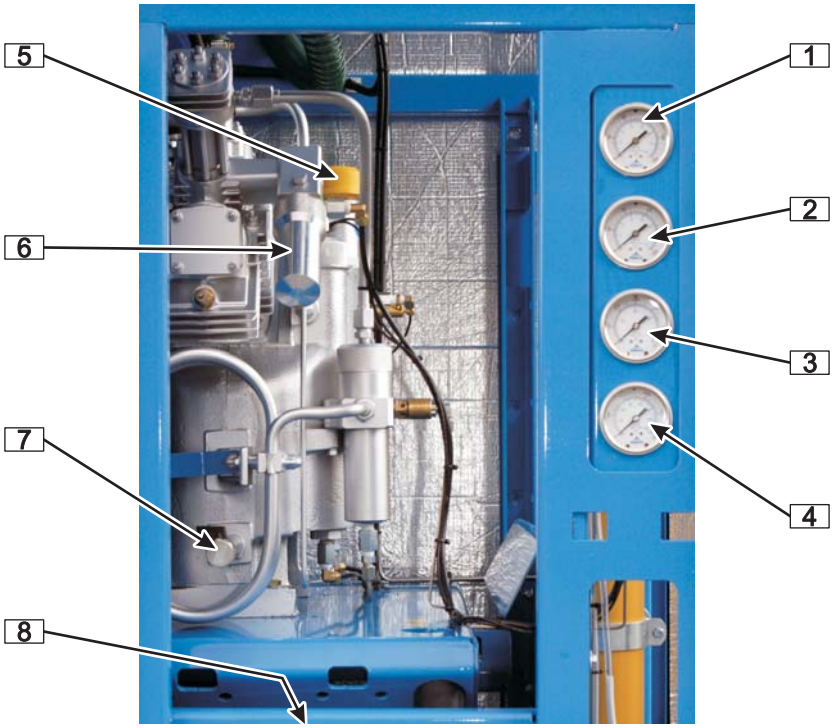

fig. 4.6-1

4.6 Front Access

1. - Oil Pressure Gauge - On all BAC units with 06 and larger compressor blocks.

2. - First Stage Pressure Gauge - shows the pressure between the first stage and the second stage of the compressor.

3. - Second Stage Pressure Gauge - shows the pressure between the second stage and the third stage of the compressor.

4. - Third Stage Pressure Gauge - only on 4 stage compressors. shows the pressure between the third stage and the forth stage of the compressor.

5. - *Oil Cap & Fill

6. - *Oil Filter

7. - *Oil Drain

* - (See section 7.5 for oil requirements) Items 5, 6, & 7 are typical for compressor blocks 06 and larger. (see section 7.6 for block details)

8. - Motor Compartment Located Below Compressor Compartment.

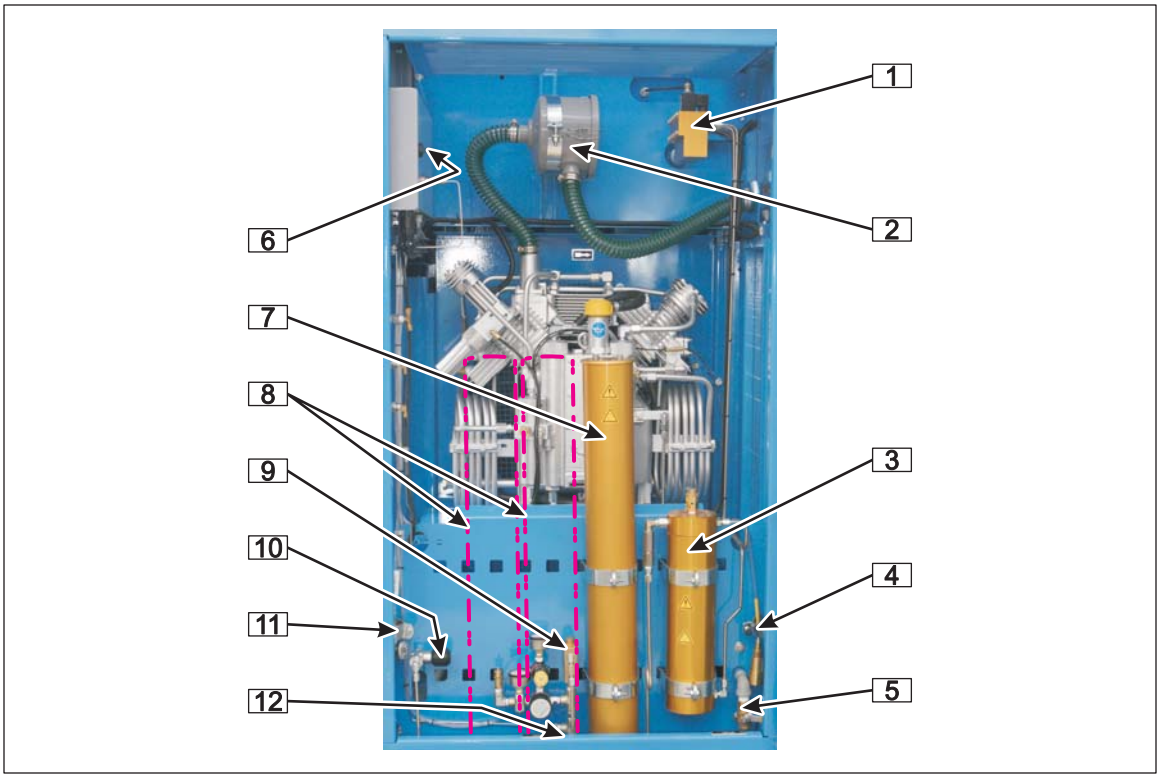

fig. 4.7-1

4.7 Main Service Access Door

1. - Auto Drain Valve.

2. - Intake air filter housing with Air Filter (Part No. 003X0225)

3. - Final separator - To be serviced by Authorised Service Technician only.

4. - 20 PPM Calibration sample gas bottle mounting bracket - (20 PPM Part No. 003M4884-1)

5. - Condensate Drain Valve - Allows water and oil, removed from the compressed breathing air to be drained away.

6. - Control Panel Latch

7. - Purification Chamber - Contains the filter cartridge. Purification chambers can be under high pressure even when the unit is off and the rest of the system is depressurized. To be serviced by Authorised Service Technician Only. (see section 7.2 & 7.3 for service information)

8. - Location of Additional Purification Chambers

9. - Pressure Maintaining Valve Assembly - the pressure maintaining valve assembly is always after the last purification chamber.

10. - Service Valve - This valve allows the air flow from the compressor and purification system to the air management panel and the fill station to be turned off.

11. - Pure Air Calibration sample gas bottle mounting bracket - (Pure Air Part No. 009006-7800)

12. - Purification Chamber(s) Bleed Valve.

5. Transportation and installation

5.1 Transport

Important!

Care should be exercised when removing the unit from its shipping carton to avoid any damage.

Danger!

This unit must be lifted using suitable forklift truck, which complies with all local safety regulations. See section 4.1 for the weight of this unit.

Before lifting, all loose parts of the unit must be firmly secured.

It is strictly prohibited to work or stand in the danger zone of a lifted load.

Important!

When lifting this unit the forks should be placed so as to lift by the bottom of the frame only. Care should be taken not to hit, pinch or lift by any components or wires that may extend below the frame.

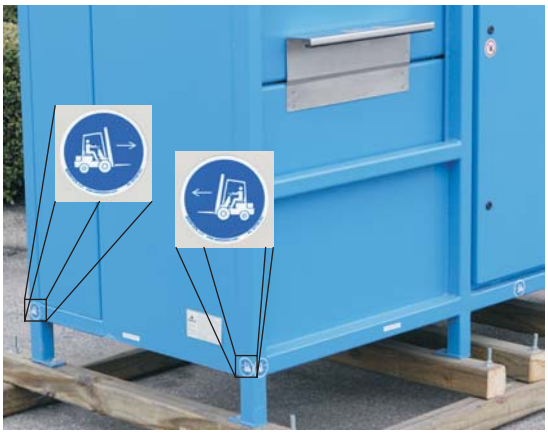

fig. 5.1-1 Lift point markers

Forks must be placed between lift point markers. (See Fig. 5.1-1)

When placing the forks to lift this unit the separation of the forks and their length must be taken into consideration.

Do not slide this unit when it is standing on the floor.

5.2 Machine Location

This unit requires the following environment, services and Clearances:

1. - The unit should be located on a level surface capable of supporting it's weight.

2. - The unit should be in a relatively clean, debris free, dry shelter out of the elements with an ambient temperature of between (35°F-1.67°C) and (113°F-45°C).

3. - Sufficient ambient air for compressor cooling.

4. - A sufficient source of clean, compressor intake air.

5. - An appropriate power supply.

6. - An appropriate means to handle the water and oil mixture discharged from the auto drain reservoir in accordance with all local laws.

7. - We recommend a minimum clearance of 4 ft (1.22 m) in front of the unit, 3 ft (914 mm) on all other sides and 2 ft (609 mm) above the unit. Contact your local factory service representative for minimum service clearances specific to your location and unit.

5.3 Power Supply

During installation, inspections, maintenance, or repairs a lock-out procedure must be followed:

Lock Out Procedure:
1. - Announce the lock-out to other personnel.
2. - Turn power off at main box.
3. - Lock power box in the off position.
4. - Put key in your pocket.
5. - Document lock out and reasons for the lock out in the daily log book.
6. - Make sure unit is clear of all personnel.
7. - Test lock-out by trying to start the unit.
8. - Complete required operations.
9. - Announce that the lock-out condition is being ended and clear the unit of all personnel.
10. - Take key out of your pocket.
11. - Unlock the power box.
12. - Turn the power box on.
13. - Announce that the unit has power to other personnel.
14. - Document that lockout has been lifted and any actions taken in the daily log book.

MAKO units are completely wired. It is, however, necessary to have a locally licensed qualified electrician install the appropriate power supply in accordance with local codes and connect to the unit.

Important!

IT IS ESPECIALLY IMPORTANT ON THREE PHASE MACHINES TO WIRE THE MOTOR STARTER FOR PROPER COMPRESSOR ROTATION.

5.4 Reservoir Drain

The unit is factory equipped with a reservoir that must be manually emptied periodically.

5.5 Remote Air Intake Installation

A remote air intake, for stationary and mobile units, can be added to the air inlet of the unit as follows.

5.5.1 Permanent Remote Air Intake

A permanent remote air intake can be added to the air inlet of the unit as follows.

1. - Determine the best location for the air intake, this location should be reasonably near to the unit and must always be free of high levels of CO, CO2, and other air contaminants which might be harmful if ingested or could cause deterioration of the units air handling equipment.

Important!

it is imperative that measures are taken to preclude water entering into the air intake of the unit.

2. - Plan the intake pipe routing, taking note of the distances and the number of elbows.

3. - Select the appropriate size of pipe to minimize the restriction of air flow in accordance with the following guidelines. Increase the size of the pipe used by .25in./6.35mm for each 10ft or 3.05m of length and for each 90° elbow used.

(see fig. 5.5.1-1 and 5.5.1-2 for examples)

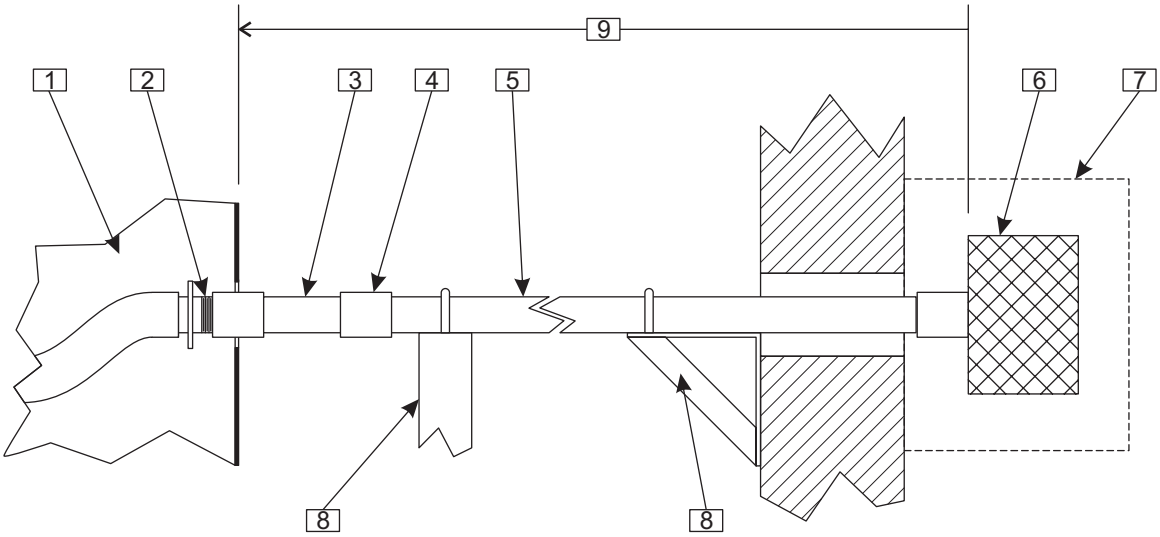

fig. 5.5.1-1 Permanent Remote Air Intake Short Run

legend:
1. - MAKO unit.

2. - MAKO unit remote air intake connection.

3. - Flex connector as vibration eliminator. (do not use rubber)

4. - coupling (may be used to increase the diameter of the run) the entire run from this point on must be the same size. It may be larger than the minimum size pipe required.

5. - pipe may be PVC or CPVC.

6. - Screening device.

7. - Screening device must be sheltered and protected from rain.

8. - remote air intake piping must be supported independent of the MAKO unit.

9. - Total distance from the MAKO unit #1 to the screening device #6 must be less than 10ft./3m with no bends and no elbows.

Important !

It is imperative that measures taken to keep water out of the system are effective!

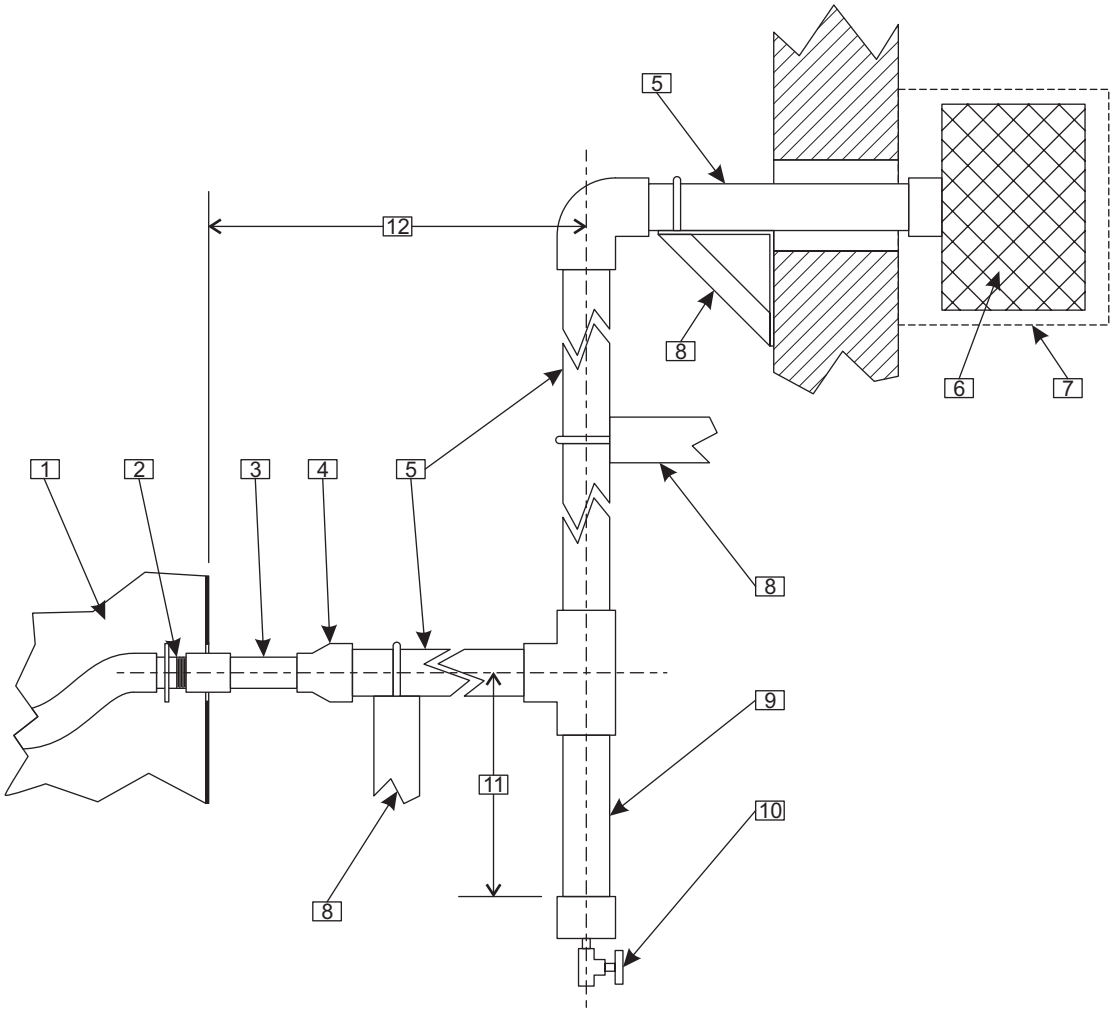

fig. 5.5.1-2 Permanent Remote Air Intake Long Run

legend:
1. - MAKO unit.

2. - MAKO unit remote air intake connection

3. - Flex connector: used as vibration eliminator (do not use rubber)

4. - Reducer: the entire run from this point on must be the same size. It may be larger than the minimum size pipe required.

5. - pipe may be PVC or CPVC (See section 5.5 for sizing requirements)

6. - Screening device

7. - Screening device must be sheltered and protected from rain

8. - Supports: remote air intake piping must be supported independent of the MAKO unit.

9. - Trap: the trap is to stop condensation and trash from reaching the compressor.

10. - Valve: to drain condensate from trap.

11. - Trap Depth: minimum 12” / 305mm.

12. - Mako Unit to Trap: maximum 5’ / 1.5m

Important !

It is imperative that measures taken to keep water out of the system are effective!

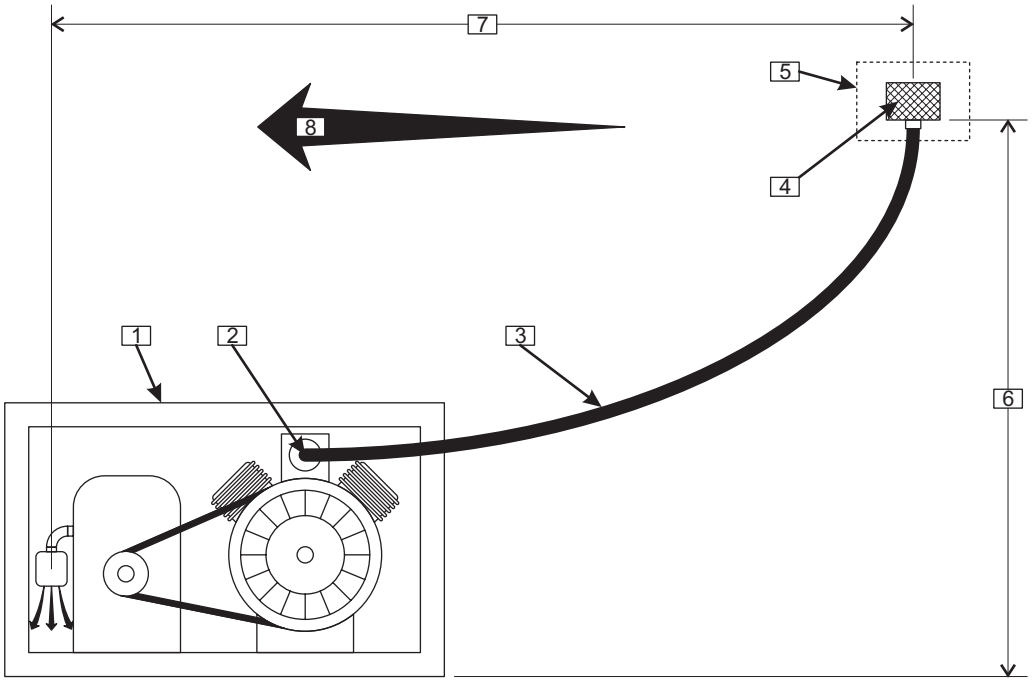

fig. 5.5.2-1 Temporary Remote Air Intake

5.5.2 Temporary Remote Air Intake

A temporary remote air intake for mobile units can be added to the air inlet of the unit as follows.

1. - Determine the best location for the air intake, this location must be upwind (see #8) of the units motor exhaust and be free of high levels of CO, CO2, and other air contaminants which might be harmful if ingested or could cause deterioration of the units air handling equipment.

Important!

It is imperative that measures are taken to preclude water entering into the air intake of the unit.

(see fig. 5.5.2-1)

legend:

1. - MAKO unit must be sheltered and protected from rain.

2. - MAKO unit remote air intake connection

3. - Temporary Flexible air intake line. Must have an I.D. no smaller than the units air intake.(#2) Keep as straight as possible. If length of line exceeds 10’ (3m) see section 5.5.1 and Fig. 5.5.1-2 for correct I.D. of line and additional requirements.

4. - Screening device.

5. - Screening device must be sheltered and protected from rain.

6. - Remote air intake should be a minimum of 6’ (1.82m) above the ground.

7. - Remote air intake should be a minimum of 7’ (2.13m) upwind (see #8) of the units engine exhaust.

8. - Direction of wind

Important !

It is imperative that measures taken to keep water out of the system are effective!

5.6 Initial Startup Procedure

Although the units parameters are preset in factory tests, it is possible for some adjustments to change as a result of shipping and handling. Once the unit is in position and energized the following initial start-up procedure should be carried out by the local distributor or by an Authorized Service Technician to preclude maintenance damage and verify factory settings:

1. - Check complete installation, including pipe work and alignment of compressor with driving unit.

2. - Remove dry type suction filter element, blow over with low pressure air and reinsert in casing.

3. - Ensure silencer bore and pipe work is clean.

4. - Ensure that the oil level in the crankcase is correct.

Important!
DO NOT OVERFILL.

5. - If the unit is equipped with a cartridge monitoring system, it is shipped from the factory with the desiccant cartridge used during factory tests still in place. This cartridge must be replaced with a new cartridge before the unit is started. If the unit does not have a cartridge monitoring system, no filter cartridges are installed. New cartridges must be installed before the unit is started. Warning tags are affixed to the purification cylinder as a reminder.

6. - If either the CO or MO electronic monitoring systems have not been installed it will be necessary to monitor the CO and MO levels with a window type indicator. Install litmus paper in the window type CO/Moisture Indicator in accordance with the procedure discussed in Section 7.4.

7. - Rotate the compressor once or twice by hand to assure free movement.

8. - Operate starter and immediately check rotation, an attached label or plate indicates correct rotation. Check pressure gauges for stage air flow.

9. - Solenoid valve will be closed as soon as the compressor has attained running speed. This should be reached in five to six seconds for direct-on-line starting and eight seconds for Star Delta.

10. - Check oil pressure reading.

11. - Moisture will be trapped in the system. It is, therefore, recommended that the system be purged prior to charging cylinders.

12. - Check and adjust, if necessary, the air pressure switch setting.

13. - After 30 minutes operation, check valve heads. The intake pipe to valve heads should be hand warm and the outlet pipes hot. This indicates that the valves are functioning correctly.

14. - The unit must be run for at least 15 minutes before any cylinder charging operations are undertaken in order to allow the filters to obtain their operational dew point level. The CMS will shut the unit down if the moisture level is above the set point after a preset delay period. This delay period is factory set at 7 minutes. Operation in the delay period is marked by a flashing green light. The delay period can be reset, if desire, using switches located inside the CMS electronics box. If at the end of 7 minutes the CMS shuts the machine down after new filters are installed simply push the ON/OFF button to OFF then turn the machine back on. This will reset the CMS and allow another 7 minutes of run time. At the end of 14 minutes of operation the system should be purged of any moisture trapped during the filter change.

15. - Check air purity. The CMS and CO monitor provide on line indication of air impurities. The CMS is a GO/NO Go type of device that does not indicate moisture content but allows the machine to run as long as moisture content does not exceed preset limits. If the green light on the CMS is lit the moisture content is satisfactory, the CO Monitor however, provides a readout of the CO in ppm. If the CO content reaches 10 ppm the CO monitor will shut the machine down and an alarm will sound.

A precise, quantitative, evaluation of the impurities in the compressor discharge air must be made with sophisticated laboratory instruments. Air samples taken under carefully controlled conditions should be forwarded to a qualified laboratory for analysis. The frequency of air sampling and analysis will be determined by the user to satisfy applicable regulations.

6. Operating Instructions

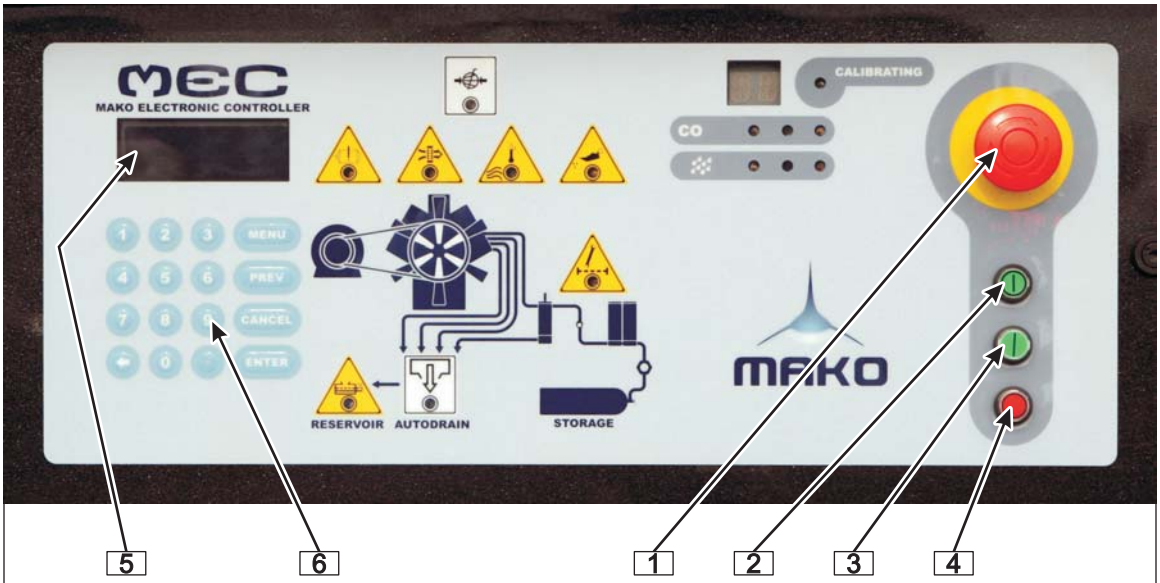

Legend:

1. - Emergency Stop Button
2. - Main On / Off Button
3. - Compressor On Button
4. - Compressor Off Button
5. - MEC Display
6. - Keypad

fig. 6.1-1 MEC Control Panel

Danger!

Please read your owner's manual carefully for important safety information.

6.1 MEC Controller

See section 4.3.1 for a full description of the MEC control panel.

6.1.1 Start-Up

Before beginning start-up check logs (see section 3.9 and 3.9.1) Check that the emergency stop button is not depressed before the unit can be turned on.

1. - To turn on MEC controller press the main On / Off button. (see fig. 6.1-1)

fig. 6.1.1-1 Main Display

2. - Press Compressor On button. (see fig. 6.1-1)
Compressor will start its normal run cycle

6.1.2 Shut-Down

1. - Turn Off Compressor press the small red Compressor Off button. (see fig. 6.1-1) record hour reading in Daily log (see section 3.9 and 3.9.1)
2. - Turn off MEC controller press the main On/Off button. (see fig.6.1-1)

6.1.3 Keypad Access

Before the keypad can be used it must be unlocked. Punch in the keypad security code and press the enter key [enter]. The default code is "1111" (i.e. "1111 [enter]") this will unlock the keypad for 3 minutes.

Note.

Panel display menu options followed by an '*' are for distributor use only and requires a distributor keypad access code.

6.1.4 Modifying Set Points

Setting Air Pressure

1. - Turn on MEC controller with main on/off button. (see fig. 6.1-1)
2. - unlock keypad per section "6.1.3 Keypad Access"
3. - On keypad Press 'Menu'

```
1) Maintenance
2) Modify Setpoints
3) Modify Times*
```

fig. 6.1.4-1 Main Menu

4. - On keypad Press "2" to select "Modify set points" (see fig. 6.1.4-1)

```
1) AIR   SETPOINTS
2) PURGE SETPOINTS*
3) CO  SETPOINTS*
```

fig. 6.1.4-2 Modify Set Points Menu

5. - On keypad Press "1" to select "Air set points" (see fig. 6.1.4-2)

```
1) AIR LOW  SETPOINT

2) AIR HIGH SETPOINT
```

fig. 6.1.4-3

6. - On keypad press "1" to select "Air Low Set Point" or "2" to select "Air High Set Point" (see fig. 6.1.4-3)
(Typical settings 5250-low to 6000-high)

```
HIGH      (4500-6000)

 SET:  5000
```

fig. 6.1.4-4

Both the low and High set points are changed by the same method we will show the high method. The two numbers shown in parenthesis are the limits that the set point can be entered. There is a limit as to how close together the high and low set points can be entered. (i.e. It may be necessary when lowering the high set point to lower the low set point first.)

7. - Key in the new set point on the keypad and press enter.

```
HIGH      (2250-6000)
   !PRESS  ENTER!
ENTERING     : 6000
```

fig. 6.1.4-5

Note.

Air Purge* & CO Set points* are for distributor use only

6.1.5 Maintenance Menu

1. - Turn on MEC controller with main on/off button. (see fig. 6.1-1)
2. - unlock keypad per section "6.1.3 Keypad Access"
3. - On keypad Press 'Menu'
4. - On the key pad press "1" to select "Maintenance"
(see fig. 6.1.4-1)

```
DUE IN 19HRS  32DAYS
1) Log      2) Valves
3) Service Functions
```

fig. 6.1.5-1

#1 Log - In development and Not Available at this time.

On keypad press "2" for "Valves"

```
Oil Press:  0
Exhaust Temp:   0F
Purge Count:      0
```

fig. 6.1.5-2

This option will display information on:
- Oil Pressure
- Final Air Outlet Temperature
- Purge count

(see fig. 6.1.5-2)

6.1.6 Service Functions

1. - Turn on MEC controller with main on/off button. (see fig. 6.1-1)
2. - unlock keypad per section "6.1.3 Keypad Access"
3. - On keypad Press 'Menu'
4. - Press # 1 Maintenance
5. - Press # 3 Service Function:

(see fig. 6.1.5-1)

fig. 6.1.6-1

6.1.6.1 Purge

This may be done to verify operation of the auto drain system

Follow steps 1 through 5 under "6.1.6 Service Functions"

1. On key pad press "1" to select "Purge" (see fig. 6.1.6-1)

fig. 6.1.6.1-1

2. On key pad press "1" to select "Test Purge", the auto drain will dump for 7 seconds and re-engage

6.1.6.2 Keypad Re-Code

Used to change units key pad access code

Note:

Save your new key pad access code in a secure place

Note:

If you misplace your new key pad access code, contact your distributor

Follow steps 1 through 5 under "6.1.6 Service Functions"

1. On key pad press "2" to select "Keypad Re-code" (see fig. 6.1.6-1) – follow instructions on display as listed below
2. - Enter Current Code using keypad
3. - Enter New Code
4. - Enter New Code again
5. - New Code Accepted

6.1.6.3 Calibrating CO Monitor*

*Required every 90 days
*Zero Air & 20PPM valves must be in the OPEN position
(Bottles are good for approximately 17 calibrations)
*The MEC unit must be on for a minimum of 30 minutes before calibration can be started. This time will allow the sample cell to stabilize. It is not necessary for the compressor to be turned on.

Follow steps 1 through 5 under "6.1.6 Service Functions"

1. On key pad press "3" to select "Calibrate CO"

fig. 6.1.6.3-1

2. - On key pad press "9" to "Autocalibrate"

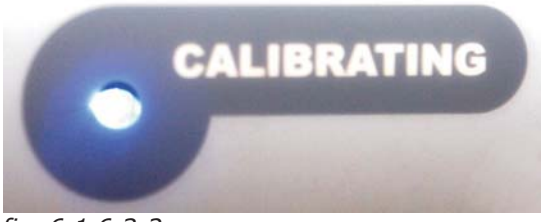

fig. 6.1.6.3-2

fig. 6.1.6.3-3

Blue light will come on next to calibrating on the panel while unit is Calibrating and the progress of the calibration will be shown on the display.(see fig. *fig. 6.1.6.3-2* & *fig. 6.1.6.3-3*)

*'Calibration Complete' will appear on display when Calibration cycle is done

3. - Close Zero Air & 20PPM valves

6.1.6.4 By-Passing The CO or MO Monitors

DANGER!

This is to be done in EMERGENCY situations ONLY when AIR is KNOWN to be ACCEPTABLE.

Follow steps 1 through 5 under "6.1.6 Service Functions"

1. On key pad press "4" to select "Bypass" (see fig. 6.1.6-1)

fig. 6.1.6.4-1 Bypass Menu

2. - On key pad press "1" to select "CO Bypass Menu" *or "2"* to select "MO Bypass Menu"

(In this example we will show the CO monitor bypass procedure. The MO monitor bypass follows the same pattern.)

fig. 6.1.6.4-2 CO Bypass Menu

3. - On key pad press "1" to select "Bypass CO Monitor"

fig. 6.1.6.4-3 CO Alarm Bypassed

Danger!

CO ALARM or MO ALARM HAS BEEN BY-PASSED!

6.1.6.5 To Cancel The CO or MO By-Pass

(In this example we will show the cancel CO monitor bypass procedure. The cancel MO monitor bypass follows the same pattern.)

Follow section "6.1.6.4 By-Passing the CO or MO Monitors" through step 2.

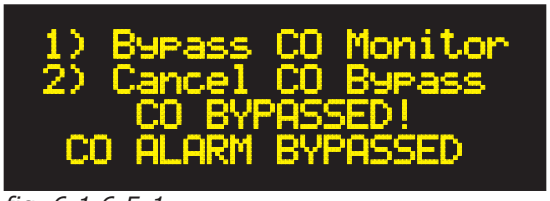

fig. 6.1.6.5-1

1. On key pad press "2" to select "Cancel CO Bypass" (see fig. 6.1.6.5-1)

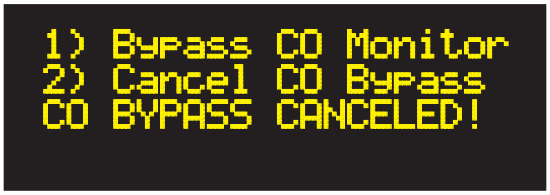

fig. 6.1.6.5-2

CO Monitor bypass has been canceled.

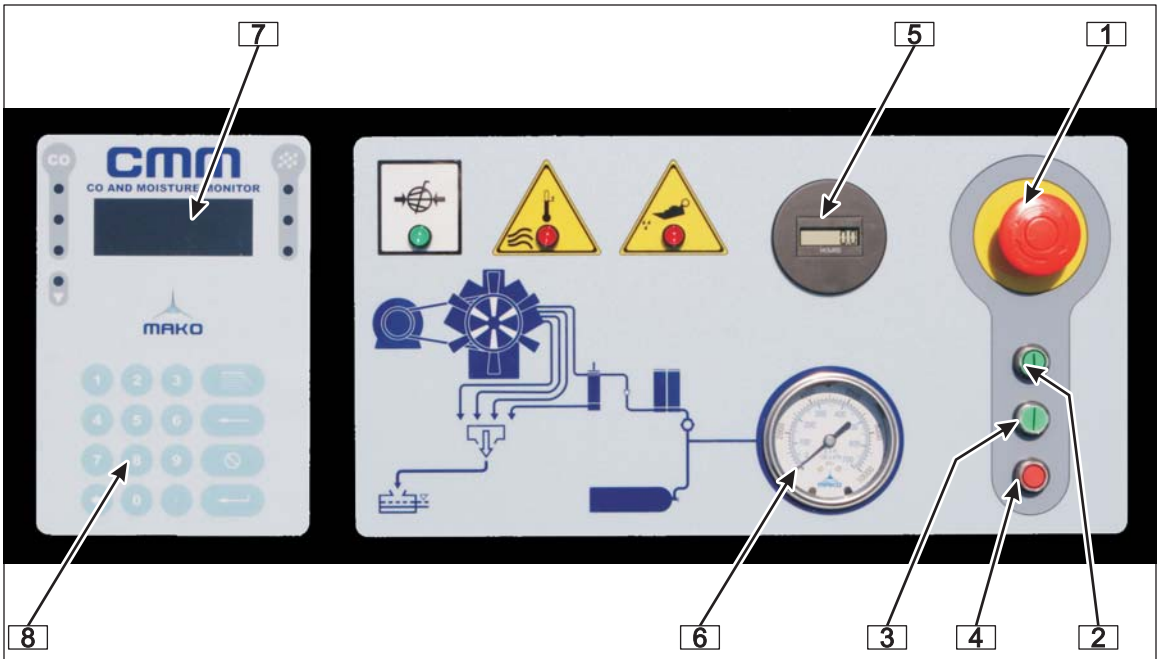

Legend:

1. - Emergency Stop Button

2. - Auxiliary On / Off Button

3. - Compressor On Button

4. - Compressor Off Button

5. - Hour Meter

6. - Outlet Pressure Gauge

CMM Unit (Optional)

7. - CMM Display

8. - CMM Keypad

fig. 6.2-1 Standard Cont. Panel & CMM

Danger!

Please read your owner's manual carefully for important safety information.

6.2 Standard Controls

See section 4.3.2 for a full description of the Standard Control Panel and CMM Panel.

6.2.1 Start-Up

Before beginning start-up inspect unit & check logs (see section 3.9, 3.9.1 and 3.9.2) Check that the emergency stop button is not depressed before the unit can be turned on.

1. - Turn on the optional CMM unit by pressing the Auxiliary On / Off button. (see fig. 6.2-1)

2. - Press Compressor On button. (see fig. 6.2-1)
Compressor will start its normal run cycle

6.2.2 Shut-Down

1. - Turn Off Compressor by pressing the small red Compressor Off button. (see fig. 6.2-1)

2. - Turn off the optional CMM unit by pressing the Auxiliary On/Off button. (see fig.6.2-1)

6.3 CMM Unit

The CMM unit is optional and if purchased will be turned on and off by the Auxiliary On/Off button. (see fig.6.2-1) The CMM unit will monitor the output of the system and stop the compressor in the event of high Carbon Monoxide levels or high Moisture levels, if optional Moisture level option is purchased.

```
MAKO COMPRESSORS v0*
  Cal Due 25 days
  0 ppm  Setpoint 10
```

6.3-1 CMM Main Display

6.3.1 Keypad Commands

These are the Command keys of the keypad.

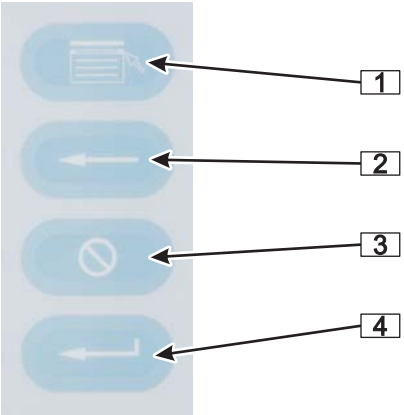

6.3.1-1 CMM Keypad Commands

legend:

[1] - Menu - This button will take you to the main menu of the CMM.

[2] - Previous - This button will take you back one screen.

[3] - Cancel - This button will allow you to cancel out of a command.

[4] - Enter - This button will allow you to enter data that has been punched in.

6.3.2 Menu Access

To customize the command program of the CMM unit it will be necessary to access the command menu.

First press the menu button (see section 6.3.1) #1 this will display the main menu.

```
1> CO SETUP
2> CALIBRATE NOW
3> BYPASS OPTIONS
```

6.3.2-1 CMM Main Menu

Next punch in the keypad security code and press the enter button (see section 6.3.1) #4. The default security code for the CMM unit is 7654 this will unlock the menu for 3 minutes.

6.3.3 CO Setup

By pressing "1" while in the main menu you will access the CO setup options.

```
1> CO SETPOINT
2> CAL PERIOD
3> CO AUTOCAL ON/OFF
```

6.3.3-1 CMM CO Setup menu

6.3.3.1 CO Set Point

By pressing "1" while in the CO setup menu (see section 6.3.3) you will access the CO set point screen. This will allow the CO set point to be changed to meet local rules and regulations.

```
CO PPM LIMIT 10ppm
Range(5 - 10)
PPM:
```

6.3.3.1-1 CMM CO Set Point Screen

The first line shows the PPM the unit is currently set at. The second line shows the limits of where it can be set. The third line will show the PPM you have keyed in.

From the CO set point screen(see fig. 6.3.3.1-1) key in the set point required and press enter (see section 6.3.1 #4)

6.3.3.2 Cal Interval

By pressing "2" while in the "CO SETUP" menu (see section 6.3.3) you will access the "Cal Interval" screen.

```
Cal Interval Days:55
   Range(30 - 90)
   Days:
```

fig. 6.3.3.2-1 CMM Cal Interval Screen

This screen will allow you to adjust how often the CO monitoring system is to be calibrated.

The first line shows the number of days between calibrations the unit is currently set at. The second line shows the limits of where it can be set. The third line will show the number of days between calibrations you have keyed in.

From the "Cal Interval" screen(see fig. 6.3.3.2-1) key in the Calibration Interval required and press enter (see section 6.3.1 #4)

6.3.3.3 Automatic Cal

By pressing "3" while in the "CO SETUP" menu (see section 6.3.3) you will access the "AUTOMATIC CAL" screen.

```
1> Enable  Auto Cal
2> Disable Auto Cal
```

fig. 6.3.3.3-1 CMM AUTOMATIC CAL Screen

This screen will allow you to select between an automatic calibration or a manual Calibration.

*The CMM unit must be on for a minimum of 30 minutes before calibration can be started. This time will allow the sample cell to stabilize. It is not necessary for the compressor to be turned on.

For both the automatic and manual calibration processes the calibration sample gas bottles will need to be turned on. (see section 4.5 #5)

When automatic calibration is enabled the unit will shut down automatically and begin the calibration process.

When automatic calibration is disabled the unit will shut down automatically and display a message that the unit must be calibrated.

By pressing "1" while in the automatic cal screen (see fig. 6.3.3.3-1) you will enable the "auto cal" feature and "AUTO CALIBRATION ON" will be added to the display.

By pressing "2" while in the automatic cal screen (see fig. 6.3.3.3-1) you will disable the auto cal feature and "AUTO CALIBRATION OFF" will be added to the display.

6.3.4 Calibrate Now

The CMM unit must be on for a minimum of 30 minutes before calibration can be started. This time will allow the sample cell to stabilize. It is not necessary for the compressor to be turned on.

For both the automatic and manual calibration processes the calibration sample gas bottles will need to be turned on. (see section 4.5 #5)

By pressing "2" while in the main menu (see section 6.3.2) you will access the "CALIBRATE NOW" screen.

```
PRESS  9
TO AUTOCALIBRATE
```

fig. 6.3.4-1 Calibration Screen

Before the calibration process is started the calibration sample gas bottles will need to be turned on. (see section 4.5 #5)

Press "9" to begin the calibration process.

```
CALIBRATING...
|                    |
```

fig. 6.3.4-2 Calibrating Screen

When Calibration has begun the calibrating screen will be displayed and the Calibration in progress indicator will light be on. (see fig. 4.3.2-1 #13)

When the calibration is finished "Calibration Complete" will be displayed.

6.3.5 By-Pass CO or MO Monitors

DANGER!

This is to be done in EMERGENCY situations ONLY when AIR is KNOWN to be ACCEPTABLE.

By pressing "3" while in the "Main Menu" (see section 6.3.2) you will access the "CO MO BYPASS" menu.

```
1> CO BYPASS
2> MO BYPASS
```

fig. 6.3.5-1 CO MO BYPASS Menu

(In this example we will show the CO monitor bypass procedure. The MO monitor bypass follows the same pattern.)

By pressing "1" while in the "CO MO BYPASS" menu (see fig. 6.3.5-1) you will access the "CO MONITOR Bypass" menu.

```
1> BYPASS CO Monitor
2> Cancel CO BYPASS
```

fig. 6.3.5-2 CO Bypass Menu

By pressing "1" while in the "CO Bypass" menu (see fig. 6.3.5-2) you will bypass the CO monitoring system.

```
1> BYPASS CO Monitor
2> Cancel CO BYPASS
   CO BYPASSED!
 CO ALARM BYPASSED
```

fig. 6.3.5-3 CO ALARM BYPASSED

Danger!

CO ALARM or MO ALARM
HAS BEEN BY-PASSED!

6.3.5.1 To Cancel The CO or MO By-Pass

(In this example we will show the cancel CO monitor bypass procedure. The cancel MO monitor bypass follows the same pattern.)

From the "CO ALARM BYPASSED" menu (see fig. 6.3.5-3 and section 6.3.5) press "2" to cancel the CO alarm bypass.

```
1> BYPASS CO Monitor
2> Cancel CO BYPASS
CO BYPASS CANCELED!
```

fig. 6.3.5.1-1 CO BYPASS CANCELED

CO Monitor bypass has been canceled.

6.4 Standard Fill Procedure

Danger!

Please read your owner's manual carefully for important safety information.

Danger!

Inspect unit and check your logs before beginning to use the unit. (see section 3.9 and 3.9.1)

Danger!

Fill pressures and fill rates must be in accordance with all local laws, regulations and the bottle manufacturers recommendations.

Danger!

During the operation of this unit if for any reason it is believed that contaminated air has passed into the system or if any leaks or other operational problems are found take the unit out of service record the problem in the Daily log (see section 3.9 and 3.9.1) and report the problem to the appropriate personnel.

Danger!

All access panels must be in place and all guards and safety devices are operating properly before any filling is begun.

Choose the air source to fill from.
- To fill from the compressor and not use storage continue to section 6.4.1.
- To begin filling from storage go to section 6.4.2.

6.4.1 Filling From Compressor

1. - Make sure all valves on fill panel and in containment drawer are closed.

2. - Check that the visual inspections and hydro test of the bottle to be filled are current. Check the bottle to be filled for it's correct pressure rating.

3. - Open bypass valve(see section 4.3 #5) and turn on compressor. The compressor will shut down when the air pressure set point is reached and will restart automatically when pressure drops. Wait for compressor to reach full pressure.

4. - Check that the regulator outlet pressure (see section 4.3 #8) matches the pressure rating of the bottle.

Danger!

All bottles being filled together must have the same pressure rating and filled at the lowest recommended fill rate.

5. - Open fill station containment shield box drawer.(see section 4.2 #4)

6. - Load customer supplied bottles into the bottle cells(see section 4.2 #3) and connect fill hoses.

7. - Open valves on customer supplied bottles and fill hose valves that are being used.

Important!

For any fill hoses that are not being used the fill hose valve must be closed.

8. - Close fill station containment shield box drawer.(see section 4.2 #4)

9. - Open fill valve in accordance with bottle manufacturer's instructions. Typically filling is a slow process.

10. - Shut off fill valve when bottle pressure and regulator outlet pressure equalize.

11. - Open fill station containment shield box drawer.(see section 4.2 #4)

12. - Close valves on customer supplied bottles and fill hose valves.

13. - Open bleed valves on any air hoses in use.

14. - Disconnect fill hoses from bottles.

15. - Remove bottles.

16. - Close all bleed valves.

17. - Repeat Steps 2 through 16 until all bottles are filled.

18. - Close bypass valve(see section 4.3 #5) and Turn off compressor.

6.4.2 Cascade Filling From Storage

Cascade filling procedure will allow the user to fill more bottles from the system storage banks before he must rely on the fill rate of the compressor. This example is written for a four bank storage system and assumes that all four banks are full.

Danger!

Begin the filling procedure from section 6.4.

Note.

Never open both To Bank and From Bank valves(see fig. 4.4-1 #1 & #3) of the same bank while refilling a bank and cascading off of another bank.

Note.

As Banks are depleted (less than 1000psi.) they should be removed from the cascade rotation. (i.e. when Bank #1 drops below 1000psi. start the next filling cycle with Bank #2)

Note.

As Banks are removed from the cascade rotation they can be refilled one at a time by turning on the compressor and opening the correct To Bank valve(see fig. 4.4-1 #1) while more bottles are being filled with the air already in storage.

1. - Make sure all valves on fill panel and in containment drawer are closed.

2. - Check that the visual inspections and hydro test of the bottle to be filled are current. Check the bottle to be filled for it's correct pressure rating.

3. - Open From Bank #1 valve.(see fig. 4.4-1 #3) The inlet pressure gauge(see fig. 4.4-1 #4) will immediately read the same pressure as the bank #1 pressure gauge.(see fig. 4.4-1 #2)

4. - Check that the regulator outlet pressure (see fig. 4.4-1 #6) matches the pressure rating of the bottle.

Danger!

All bottles being filled together must have the same pressure rating and filled at the lowest recommended fill rate.

5. - Open containment fill station. (see fig. 4.2-1 #4)

6. - Load customer supplied bottles into the bottle cells and connect fill hoses.

7. - Open valves on customer supplied bottles and fill hose valves (see fig. 4.2-2 # 1) that are being used.

Important!

For any fill hoses that are not being used the fill hose valve must be closed.

8. - Close containment fill station. (see fig. 4.2-1 #4)

9. - Open fill valve (see fig. 4.4-1 #8) in accordance with bottle manufacturer's instructions. Typically filling is a slow process.

10. - Close fill valve(see fig. 4.4-1 #8) when bottle pressure(see fig. 4.4-1 #7) and regulator outlet pressure(see fig. 4.4-1 #6) equalize at desired pressure and continue to step #11.

or

If pressures equalize and desired pressure is not obtained continue to step#19

11. - Open containment fill station. (see fig. 4.2-1 #4)

12. - Close valves on customer supplied bottles and fill hose valves (see fig. 4.2-2 #1) that are being used.

13. - Open bleed valves(see fig. 4.2-2 #3) on any air hoses in use.

14. - Disconnect fill hoses from bottles.

15. - Remove bottles.

16. - Close all bleed valves. (see fig. 4.2-2 #3)

17. - Repeat process beginning at Steps 1 until all bottles are filled.

18. - Continue to step #40

19. - Close "From Bank #1" valve.(see fig. 4.4-1 #3)

20. - Open "From Bank #2" valve.(see fig. 4.4-1 #3)

21. - Close fill valve(see fig. 4.4-1 #8) when bottle pressure(see fig. 4.4-1 #7) and regulator outlet pressure(see fig. 4.4-1 #6) equalize at desired pressure and continue to step #22.

or

If pressures equalize and desired pressure is not obtained continue to step#24

22. - Remove filled bottles per steps #11 thru #16 and repeat process beginning at Steps 1 until all bottles are filled.

23. - Continue to step #40

24. - Close "From Bank #2" valve.(see fig. 4.4-1 #3)

25. - Open "From Bank #3" valve.(see fig. 4.4-1 #3)

26. - Close fill valve(see fig. 4.4-1 #8) when bottle pressure(see fig. 4.4-1 #7) and regulator outlet pressure(see fig. 4.4-1 #6) equalize at desired pressure and continue to step #27.

or

If pressures equalize and desired pressure is not obtained continue to step#29

27. - Remove filled bottles per steps #11 thru #16 and Repeat process beginning at Steps 1 until all bottles are filled.

28. - Continue to step #40

29. - Close "From Bank #3" valve.(see fig. 4.4-1 #3)

30. - Open "From Bank #4" valve.(see fig. 4.4-1 #3)

31. - Close fill valve(see fig. 4.4-1 #8) when bottle pressure(see fig. 4.4-1 #7) and regulator outlet pressure(see fig. 4.4-1 #6) equalize at desired pressure and continue to step #32.

or

If pressures equalize and desired pressure is not obtained continue to step#34

32. - Remove filled bottles per steps #11 thru #16 and Repeat process beginning at Steps 1 until all bottles are filled.

33. - Continue to step #40

34. - Close "From Bank #4" valve.(see fig. 4.4-1 #3)

35. - Start up compressor if it is not already started and open Bypass valve

36. - Close fill valve(see fig. 4.4-1 #8) when bottle pressure(see fig. 4.4-1 #7) and regulator outlet pressure(see fig. 4.4-1 #6) equalize at desired pressure.

37. - Remove filled bottles per steps #11 thru #16 and Repeat process beginning at Steps 1 until all bottles are filled.

38. - Continue filling bottles from stored air and topping-off directly from the compressor until all Banks are depleted.

39. - Continue filling empty tanks from compressor when all Banks are depleted Per 6.1.1 Filling From Compressor .

40. - When all tanks are filled and removed from unit make sure all valves on fill panel and in containment fill station are closed.

41. - Open all To Bank valves(see fig. 4.4-1 #1) to any Banks which need to be filled and start up compressor if it is not already started

42. - Close all To Bank valve(see fig. 4.4-1 #1) when compressor reaches it's set-point and all banks are at full pressure.

43. - Shutdown Compressor.

44. - Record any pertinent information in your daily log and record the time out.

Note.

These procedures can be varied to suite the status of the system and the operators preferences but safety procedures must never be compromised.

Note.

This procedure is an example of how to run a cascade fill cycle with all banks full. when all Banks are not full. The cascade fill cycle should run starting from the Bank with the lowest pressure, which is over 1000psi, in order of pressure to the bank with the highest pressure.

7. Maintenance

During installation, inspections, maintenance, or repairs a lock-out procedure must be followed:

Lock Out Procedure:
1. - Announce the lock-out to other personnel.
2. - Turn power off at main box.
3. - Lock power box in the off position.
4. - Put key in your pocket.
5. - Document lock out and reasons for the lock out in the daily log book.
6. - Make sure unit is clear of all personnel.
7. - Test lock-out by trying to start the unit.
8. - Complete required operations.
9. - Announce that the lock-out condition is being ended and clear the unit of all personnel.
10. - Take key out of your pocket.
11. - Unlock the power box.
12. - Turn the power box on.
13. - Announce that the unit has power to other personnel.
14. - Document that lockout has been lifted and any actions taken in the daily log book.

DANGER!

Before carrying out any maintenance work be sure that all pressure is released and the machine is electrically isolated. Never attempt to straighten badly bent tubing or re-use damaged fittings.

IMPORTANT!

Tampering with safety valves invalidates the warranty.

On CE units the pressure setting of each pressure relief valve can be found on the tag attached to the relief valve.

7.1 Maintenance Schedule

Regular servicing is essential to maintaining compressor design performance. Maintenance intervals will depend on operating conditions. The following intervals can be used as a guide when the machine is operated under normal conditions.

All new units and units which have had rings replaced must go through a Run-in (Break-in) period. (See section 7.5 for more information)

Daily Or Each Time Unit Is Operated

Inspect unit and Check Logs per sections 3.9, 3.9.1 & 3.9.2.

See Appendix F & G for additional required Maintenance Schedule.

CAUTION!

Never tighten any fitting when it is under pressure.

Weekly Maintenance

Operate compressor continuously for a period of not less than one hour allowing for at least four condensate drain cycles. This will remove any moisture build up in the system and provide proper lubrication.

Units which are not run continuously for a minimum of 1 hour once a week require additional precautions to be taken by qualified service personnel.

Check function of Pressure Maintaining Valve:
1. - With compressor off slowly and carefully open the system outlet valve or a fill hose valve to release pressure from system outlet.
2. - Turn on compressor.
3. - Air should not come out of system outlet or a fill hose until purification system pressure reaches a minimum of 1900 psi. (131 bar)
4. - If pressure fails to reach 1900 psi. (131 bar) shut down unit until problem is corrected.

Check stage pressures to determine if they are within stated limits. Abnormal stage pressures can be a sign of a serious problem shut down the unit. do not restart compressor until problem has been resolved.

Inspect all nuts, screws and fittings for tightness. Inspect for oil or air leaks. Leaks must be rectified immediately.

Inspect air intake filter and clean or replace as necessary.

7.2 Purification System layout and function

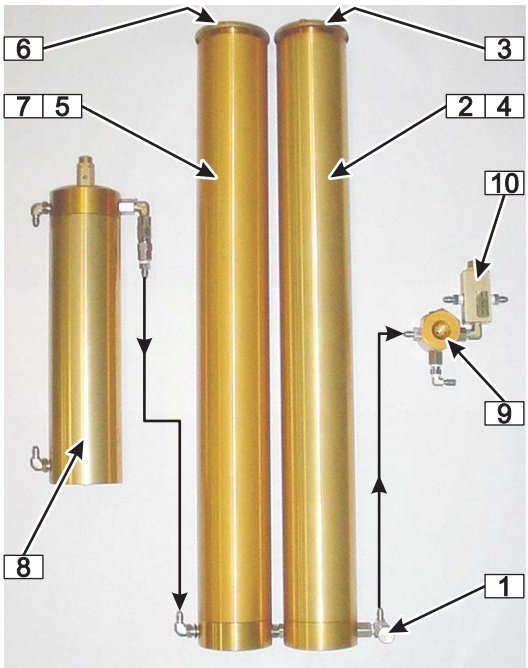

fig. 7.2-1 Purification system

1. - Bleed Valve
2. - Purification Chamber - Final chamber in the purification system. (all breathing air units will have one of these)(MK style housings are shown)
3. - Top Plug of the Purification Chamber - If the unit has an electronic CO or MO monitoring system this is where the sensor will be mounted.
4. - Purification Filter Cartridge - This cartridge contains:
Desiccant - to remove moisture.
Activated Charcoal - to remove smells and taste.
Catalyst - to remove carbon monoxide

Danger !

The Catalyst must be kept free of moisture or it will not remove (convert) the carbon monoxide. Test the outlet air using a CO or Dew Point monitor. If there is doubt, change the cartridge at once.

5. - Drying Chamber - units may not have a drying chamber or they may have more than one. (MK style housings are shown)
6. - Top Plug of the Drying Chamber
7. - Drying Cartridge - This cartridge contains Desiccant to remove moisture.
8. - Separator - mechanically removes liquid moisture and oil.
9. - Window Type CO & MO Indicator - This will be installed only if the Electronic CO & MO monitoring system is not installed in the unit.
10. - Pressure Maintaining Valve

7.3 Filter Cartridge Capacity & Replacement

Capacity

See "Appendix-A" for the MAKO purification system data sheets for the FC models, "appendix-B" for the U.S. MK models and "appendix-C" for the FD models.

These appendices will show, the Cartridges required and the processing capacity in cubic feet for each purification system.

Next the flow capacity of the compressor in cubic feet per minute and the maximum hours between filter changes will be shown.

Cartridges have a maximum service life of 6 months regardless of the number of hours run.

After filter cartridges are changed check the correct purification data sheets for the number of hours to the next filter change. Record the hour and date that the next filter change will be due in the daily log book. Always carry this information forward to the current page of the daily log book.

Replacement

The following procedure is for filter cartridge replacement for a MAKO unit with a MK5C purification system.(see section 7.2) Modify as necessary for your MAKO unit.

1. - Make sure the compressor is turned off.

2. - Make sure any valves to any storage banks are closed.

3. - Slowly Open the bleed valve [1] to depressurize the purification system.

Danger !

Rapid venting or charging of these chambers may cause the cartridges to rupture. This may cause contamination of the air stream.

Check for pressure in the purification system with the pressure gauge on the standard control panel(see fig. 4.3.2-1 #9) or on the display of the MEC controller.(see fig. 4.3.1-1 #17) Bleed valve must be left open until all cartridge changes are complete.

4. - Disconnect cartridge monitor wires from purification chamber top plug [3] if electronic CO or MO monitoring system is installed.

fig. 7.3-1 Top Plug Removal

5. - With moderate pressure slowly remove top plug [3] from purification chamber[2]

Danger!

You should be able to turn the plug[3] with moderate pressure. If more force is required – STOP. Recheck bleed valve[1] and gauge to make certain that purification system is not still pressurized. The bleed valve[1] remains open until all cartridge changes are complete.

6. - After top plug is removed, remove the old cartridge.

7. - Clean the inside of the chamber with a clean cloth. Check for liquid carryover.

Danger!

It is normal to for there to be a small liquid carryover past the separator.
Regardless of the number of drying chambers there are, the liquid carryover should never go past the first chamber past the separator.
If there is excessive amount of liquid carryover contact your local distributor as this may be a sign of a serious problem.

8. - Do not touch the new cartridge with your bare skin as this may affect the performance of the system.

9. - Remove the seal from the top and the protective plastic plug from the bottom of the cartridge[4].

10. - lower the purification cartridge[4] into the purification chamber[2], it will slide over the mating tube in the bottom of the purification chamber[2] and should require only slight pressure to seat.

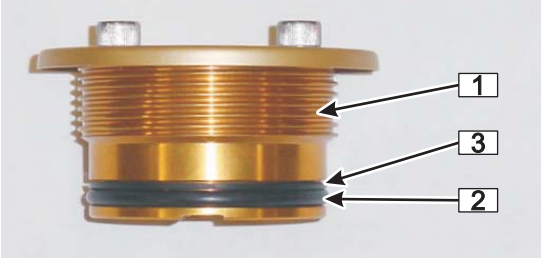

fig. 7.3-2 Top Plug & O-rings

11. - Inspect O-ring[2] and backing ring[3] and replace as necessary.(see fig. 7.3-2) (O-ring and Backing Ring Kit Part No. 005M310)

12. - Check top plug[1] threads for debris and clean as necessary.(see fig. 7.3-2)

13. - Lubricate O-ring[2], backing ring[3] and top plug[1] threads as necessary with silicone grease.(see fig. 7.3-2)

14. - Screw purification chamber top plug[3] into Purification chamber[2] until dust cover hits, then back out 1/8 turn.(see fig 7.2-1) If binding is encountered, check that cartridge is properly positioned and threads are clean.

15. - Reconnect cartridge monitor wires to purification chamber top plug[3] if electronic CO or MO monitoring system is installed.(see fig. 7.2-1)

16. - Replace the drying cartridge[7] in drying chamber[5] (see fig. 7.2-1) by following the same procedure as in steps #5 thru #14. Repeat for each drying chamber in your system.

7.4 CO / Monitor Indicator (window Type) Maintenance

The litmus paper ring and the CO button in the window type CO/Moisture indicator have to be installed before the compressor is run. It is not factory installed because of contamination from ambient air during shipping.

Important!

Do not open sealed package until ready to install, otherwise, contamination will result.

Danger!

All pressure must be off the system before installing the indicator.

CO/Moisture Indicator installation is accomplished as follows:

1. - Make sure the compressor is turned off.

2. - Make sure any valves to any storage banks are closed.

3. - Slowly Open the bleed valve[1](see fig. 7.2-1) to depressurize the purification system. check for pressure in the purification system with the pressure gauge on the standard control panel(see fig. 4.3.2-1 #9) or on the display of the MEC controller.(see fig. 4.3.1-1 #17) Bleed valve must be left open until CO/MO indicator maintenance is complete

4. - Remover large nut from front of window type CO & MO indicator.[9](see fig. 7.2-1)

2. - Remover small plug from back of monitor.

3. - Push window out with thin instrument (pipe cleaner, paper clip, etc.)

4. - Reinstall small plug

5. - Check "O"ring

6. - If window is dirty, wash it with soapy water and blow dry. Be careful not to let foreign matter into system.

7. - Open Replacement Indicator Kit package. (Part No. 005M7414)

8. - Install paper ring first

9. - Install button over center of ring

10. - Reinstall window.

11. - Reinstall large nut and hand tighten firmly.

7.5 Lubrication

The use of correct oil is important for proper operation. Only the following oils are considered suitable for MAKO compressors:

MAKO BLUE ("S") Synthetic Oil for ambient operating temperatures between 0°C (32 F) to 45°C (113 F). (Quart (.94 Liter) Part No. 003MBQ-S, U.S. Gal.(3.78 Liters) Part No. 003MBG-S)

MAKO "W" Synthetic Oil for ambient operating temperatures between 10°C (14 F) to 15°C (59 F). (Quart (.94 Liter) Part No. 005105-003, U.S. Gal.(3.78 Liters) Part No. 005105-004)

New units and units which have had rings replaced will require a run-in (break-in) Period

The oil change schedule during any run-in (break-in) Period will be as follows.

- oil will be changed after first 50 hours or 3 months from the beginning of the run-in (break-in) period which ever comes first.
- oil will be changed after first 100 hours or 6 months from the beginning of the run-in (break-in) period which ever comes first.

Regular oil changes will be after every 1000 hours or 6 months which ever comes first.

If the unit has an Oil filter (see section 7.6 for block derails) the Oil filter and O-ring must be changed at the same time as the oil.

The date and hour of each oil change, as well as the date and hour of the next oil change due, should be documented in the daily log book under alarms / comments.

The due date and hour of the next oil change should be brought forward and kept on the current page of the daily log book.

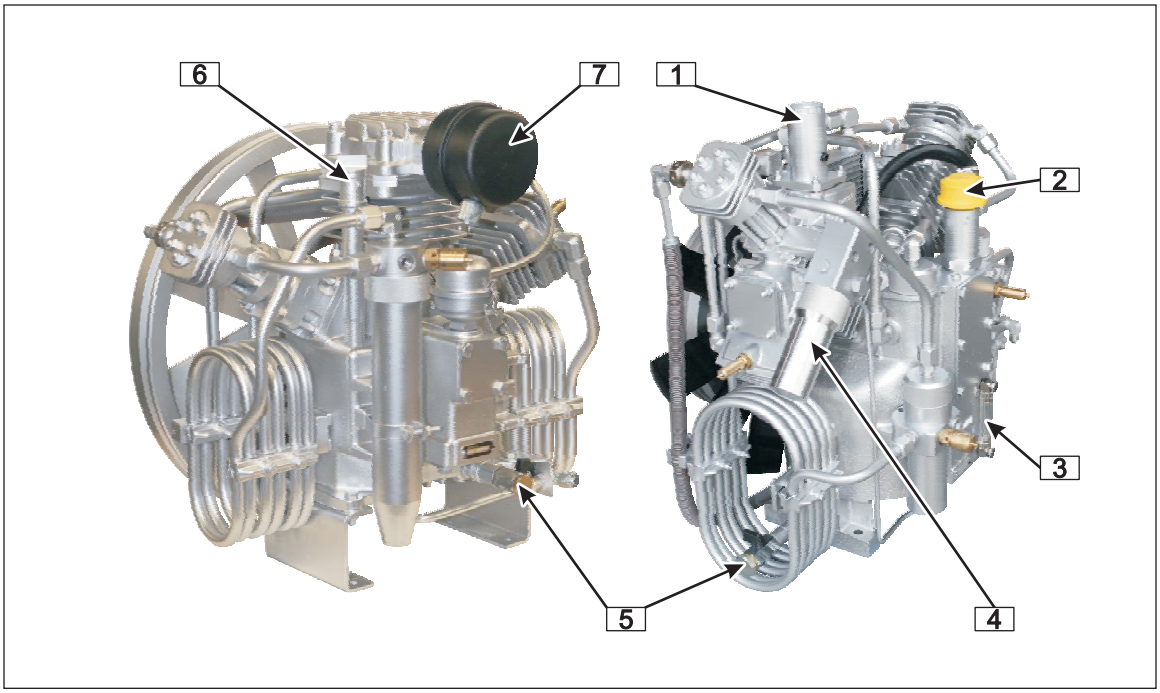

fig. 7.6-1 Block Details

7.6 Block Details

Legend:

The layout on the right is typical for the 06, 07, 08 and 09 blocks.

The layout on the Left is typical for the 04 and 05 blocks.

1. - Air intake connection - Air intake filter may be remotely mounted or may be locally mounted here.

2. - Oil Breather Cap and Fill.

3. - Oil Level Sight Glass. Compressor must be off to check oil level. (see fig. 7.6-2 Sight Glass)

[1] Add oil - do not run unit if oil is below this point.

[2] Full - do not run unit if oil is above this point.

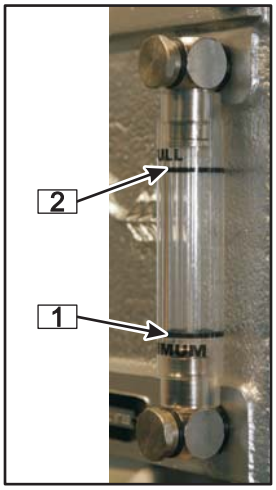

fig. 7.6-2 Sight Glass

4. - Oil Filter Housing.

5. - Oil Drain Valve.

6. - Oil Dipstick and Fill. Compressor must be off to check oil level. To Check Oil level remove dipstick, wipe clean with a clean lint free rag and reinstall dipstick, then remove dipstick and check oil level. (see fig. 7.6-3 Dip Stick)Repeat this operation to ensure accuracy of reading.

[1] Add oil - do not run unit if oil is below this point.

[2] Full - do not run unit if oil is above this point.

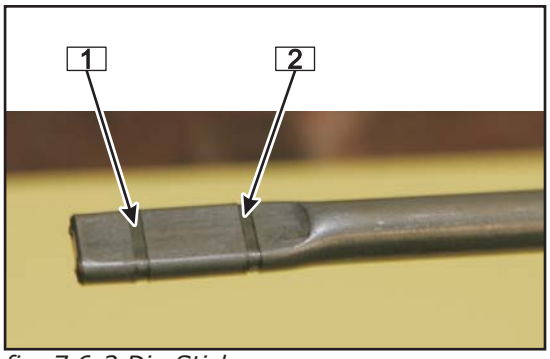

fig. 7.6-3 Dip Stick

7. - Locally Mounted Air Intake Filter - Air intake filter may be remotely mounted.

MAKO Purification System Data Sheet
For North American MK Models

Purification System	MK2C	MK5C	MK10C	MK420C
Standard On	BAC04 - BAC06H BAM04 - BAM06H HBA04 - HBA06H	BAC07 - BAC09H BAM07 - BAM09H HBA07 - HBA09H		
Cartridges	PD1803	PD1803 PD1503	PD1803 2-PD1503	2-PD1803 8-PD1503
Processing Capacity CF/m³	24,000/ 679.60	57,400/ 1,625.38	83,000/ 2,350.29	300,000/ 8,495.05

Comp. Flow Capacity CFM/ LPM/m³/hr	Maximum Hours at 27°C (80°F)			
5.8 / 164 / 9.85	66.9	164.9	238.5	862.0
8.6 / 243 / 14.61	46.5	111.2	160.8	581.3
11.1 / 314 / 18.85	36.0	86.1	124.6	450.3
13.1 / 370 / 22.25	30.5	73.0	105.5	381.6
14.0 / 396 / 23.78	28.5	68.3	98.8	357.1
18.7 / 529 / 31.77	21.0	53.0	75.1	267.0
20.7 / 586 / 35.16	19.3	46.2	66.8	241.5
25.3 / 716 / 42.98	16.0	38.0	55.0	198.0
27.0 / 764 / 45.87	14.8	35.4	51.2	185.1
30.6 / 866 / 51.99	13	31.0	45.0	163.0
33.2 / 940 / 56.40	12.0	28.8	41.6	150.6

	Removes						Purification Media		
Cartridge Part No.	**Water**	**Oil Vapor**	**Taste**	**Odor**	**Noxious Gasses**	**Carbon Monoxide**	**Activated Carbon**	**Molecular Sieve 13X**	**Catalyst**
PD1803	X	X	X	X	X	X	X	X	X
PD1503	X	X						X	

Maximum Operating Temperatures: PD1803 - 66°C(150°F) and PD1503 - 93°C(200°F)

MAKO Purification System Data Sheet
For Global FD Models

Purification System	FD1C	FD2C	FD3C	FD4C
Standard On	BAC04 - BAC06H BAM04 - BAM06H HBA04 - HBA06H	BAC07 - BAC09H BAM07 - BAM09H HBA07 - HBA09H		
Cartridges	MCN1815	MCN1815 1-MCN1515	MCN1815 2-MCN1515	MCN1815 3-MCN1515
Processing Capacity CF/m³	29,260/ 828.55	44,660/ 1264.63	70,840/ 2005.96	106,260/ 3008.95
Comp. Flow Capacity CFM/ LPM/m³/hr	**Maximum Hours at 20°C (68°F)**			
5.8 / 164 / 9.85	84	128	203	305
8.6 / 243 / 14.61	56	86	137	205
11.1 / 314 / 18.85	44	67	107	160
13.1 / 370 / 22.25	37	57	90	135
14.0 / 396 / 23.78	35	53	85	127
18.7 / 529 / 31.77	26	40	63	95
20.7 / 586 / 35.16	24	36	57	86
25.3 / 716 / 42.98	19	29	47	70
27.0 / 764 / 45.87	18	28	44	66
30.6 / 866 / 51.99	16	24	38	58
33.2 / 940 / 56.40	15	23	36	54

	Removes						**Purification Media**		
Cartridge Part No.	**Water**	**Oil Vapor**	**Taste**	**Odor**	**Noxious Gasses**	**Carbon Monoxide**	**Activated Carbon**	**Molecular Sieve 13X**	**Catalyst**
MCN1815	X	X	X	X	X	X	X	X	X
MCN1515	X	X						X	

Maximum Operating Temperatures: MCN1815 - 66°C(150°F) and MCN1815 - 93°C(200°F)

Record Filter Cartridge change and Oil Change Information in Alarms/Comments column.
Document Hours and Dates changes are done and
Hours and dates next changes are due.
Always bring Hours and Dates Due forward to the current page of the log book.

Date	Oil Level-Leaks	Ambient Air Quality	Hours Start / Stop	Maintenance/Filter	Operator	Alarms / Comments
/ /						
/ /						
/ /						
/ /						
/ /						
/ /						
/ /						
/ /						
/ /						
/ /						
/ /						
/ /						
/ /						
/ /						
/ /						
/ /						
/ /						
/ /						
/ /						
/ /						
/ /						
/ /						
/ /						
/ /						
/ /						
/ /						
/ /						
/ /						
/ /						
/ /						
/ /						
/ /						
/ /						
/ /						
/ /						
/ /						
/ /						
/ /						
/ /						

MAINTENANCE LOG

			REF. No.:
COMPRESSOR SPEC.	MOTOR SPEC.	INSTALLED AT	OIL GRADE USED:
TYPE:	TYPE:		CHECK OIL LEVEL
SPEED:	B.H.P.		CHECK WATER IN/OUT TEMP.
SERIAL No.:	DRIVE:	DATE INSTALLED:	CHECK COOLING FAN BLADES

DATE	TIME	*HOURS RUN	+ STAGE TEMP. °C	FINAL STAGE TEMP. °C	STAGE PRESSURES #(BAR-PSI)					FINAL AIR PRESSURES (#BAR-PSI)	SERVICE PLAN NUMBER	REMARKS/COMMENTS	SIGNED/INITALS
					1	2	3	4	5				
/ /		50											
/ /		500											
/ /		1000											
/ /		1500											
/ /		2000											
/ /		2500											
/ /		3000											
/ /		3500											
/ /		4000											
/ /		4500											
/ /		5000											
/ /		5500											
/ /		6000											
/ /		6500											
/ /		7000											
/ /		7500											
/ /		8000											
/ /		8500											
/ /		9000											
/ /		9500											
/ /		10000											

* - FILL IN HOURS RUN AS DETAILED ON SERVICE PLAN FOR PARTICULAR COMPRESSOR TYPE
\+ - FILL IN APPROPRIATE STAGE TRIP TEMPERATURE READING
SERVICE ENGINEER TO SIGN/INITIAL & FILL IN ANY OTHER COMMENTS IN REMARKS COLUMN

Recommended Breathing Air Unit Maintenance Schedule

For all BAC, BAM, HBA & AC Units

(see APP-G For Block Maintenance Schedule)

	Maintenance Intervals						
Action Required	**First 50 Hours run**	**Every 500 Hours run**	**Every 2000 Hours run**	**or 6 Mo.***	**or 12 Mo.***	**Every 6 Mo.**	**Every 12 Mo.**
Check Belt Alignment and Tension	X	X					
Replace Inlet Air Filter Element.		X			X		
Clean and Inspect Final Separator.						X	
Rebuild Final Separator.							X
Rebuild Automatic Condensate Drain Valve.							X
Rebuild Check Valve in Purification System.							X
Rebuild Any Fill Pressure Regulator(s) in Your unit if there are any.							X
Replace Window Type CO/MO Indicator Elements. (only used on units without Electronic CO/MO Monitoring)		X		X			
Conduct a Full Mechanical Check of Unit.			X				
Check Pressure Gauges for Correct Reading.			X				

* - Actions which indicate both a Hours Run Interval and a Calender Interval are to be done at which ever comes first.

Purification filters should be changed according to the hours run based on the size of the purification system and the cfm rating of the compressor or every 6 months (which ever comes first). (See Section 7.3 for Details.)

Recommended Breathing Air Unit Block Maintenance Schedule

BAC04, BAC05, BAM04, BAM05, HBA04, HBA05, AC04, AC05 & AC05E
(Three Stage Air-Cooled Units Using Synthetic Oil)
and
BAC06, BAC07, BAC08, BAC09, BAM06, BAM07, BAM08, BAM09, HBA06, HBA07, HBA08 & HBA09
(Four Stage Air-Cooled Units Using Synthetic Oil)

	Maintenance Intervals							
Action Required	**First 50 Hours Run**	**First 100 Hours Run**	**Every 1000 Hours Run**	**Every 2000 Hours Run**	**Every 4000 Hours Run**	**or 3 Mo.****	**or 6 Mo.****	**or 12 Mo.****
Change Oil (during run-in periods*) (Change Oil Filter on 06, 07, 08 & 09 Blocks	X	X		*	*	X		
Change Oil (Change Oil Filter on 06, 07, 08 & 09 Blocks			X				X	
Clean all external surfaces of all coolers, especially the first stage unit and finned area of final delivery cooler. Use a soft brush and low pressure air. Do not use gasoline, diesel fuel, or other toxic substances. Ensure fan blades are clean.			X					X
Valve Maintenance Kits - All Stages				X				
Replace Piston Rings - Final Stage Only				X				
Replace Piston Rings - All Stages					X			
Replace Valves - All Stages					X			
Replace Piston & Liner - Final Stage Only					X			
Hydrostatically test intercooler and aftercooler to minimize the risk of tube failure during operation					X			

* Each time after piston rings are replaced unit must again be run-in (Broken In) in the same manner as a new machine.
(See Section 7.5 for Additional Information.)

** - Actions which indicate both a Hours Run Interval and a Calender Interval are to be done at which ever comes first.

Purification filters should be changed according to the hours run based on the size of the purification system and the cfm rating of the compressor or every 6 months (which ever comes first). (See Section 7.3 for Details.)