PACIFIC E27
PACIFIC EG27

HIGH PRESSURE BREATHING AIR COMPRESSOR

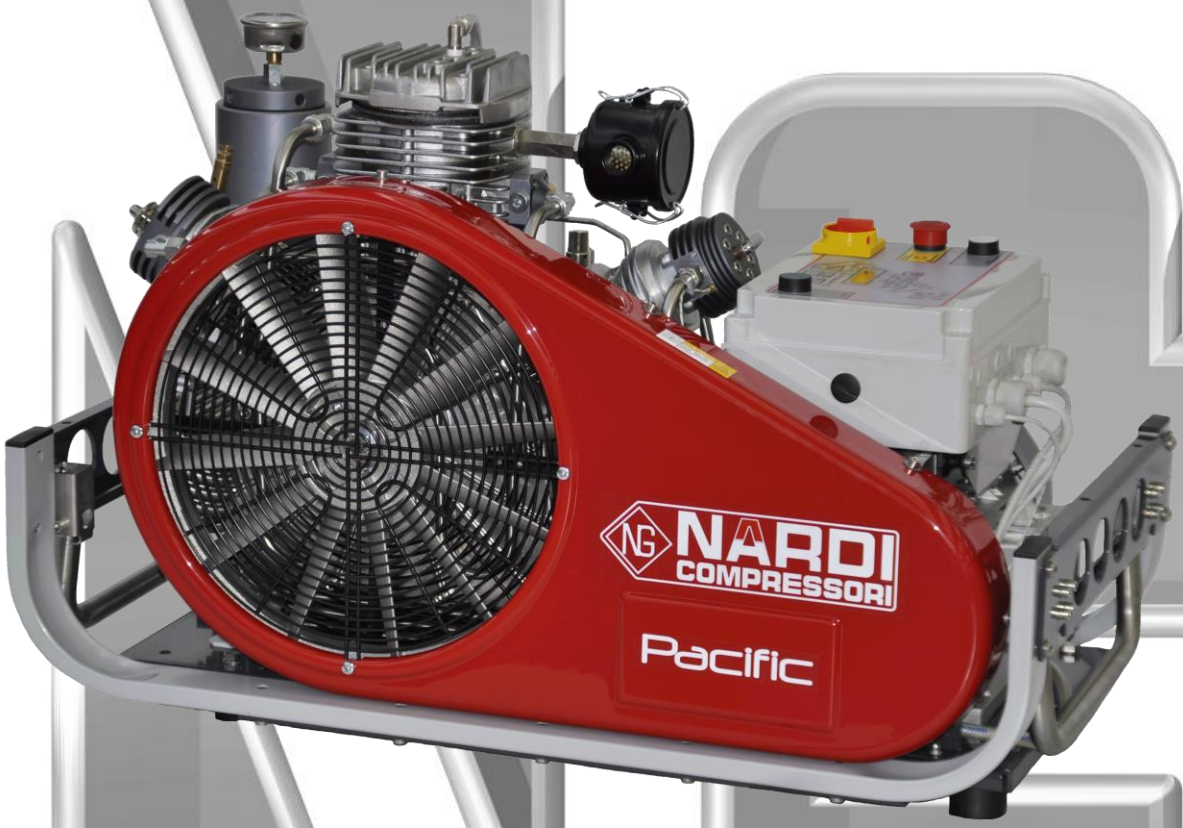

User's and Maintenance Manual

This User's and Maintenance Manual contains general information and instructions for the operation and maintenance of high pressure breathing air compressor PACIFIC E27 – EG27. All users must read this manual carefully and understand it in its entirety before operating the machine.

WARNING. The operation of this machine is to take place only after having read this manual in all its parts.

INDEX

1 BASIC INFORMATION page 05

1.01 Warning Symbol Explained page 05
1.02 Precautions page 05
1.03 Brief Introduction page 05
1.04 Description of the Compressor Block page 06
1.05 Description of PACIFIC E27 – EG27 (Breathing Air) page 07
1.06 Technical Datasheet PACIFIC E27 – EG27 page 08

2 SAFETY REGULATIONS FOR THE USE OF THE COMPRESSOR page 09

2.01 Identification of Safety Regulations for the Operators page 09
2.02 Safety Regulations for the Operators and for the Proper Use of the Compressor page 09
2.03 Safety Essentials page 09
2.04 General Safety Considerations page 10

3 WARRANTY AND ASSISTANCE page 11

3.01 Warranty of the Compressor page 11
3.02 Maintenance and Assistance page 11

4 INSTALLATION page 12

4.01 Unpacking and Handling page 12
4.02 Placement in Open Air page 12
4.03 Placement in a Close Room and Minimum Requirements of the Room page 12
4.04 Room with Artificial Ventilation page 13
4.05 Intake Pipe page 14
4.06 Electric Line Connection page 14

5 QUICK STARTING GUIDE page 15

6 OPERATION AND USE page 16

6.01 Preparing to Start the Compressor page 16
6.02 Starting the Compressor page 16
6.03 Use of Filling Valves page 17

7 MAINTENANCE AND SERVICE page 18

7.01 Maintenance Operations page 18
7.02 Lubrication System page 18
7.03 Oil page 18
7.04 Oil Change page 19
7.05 Change Type of Oil page 19
7.06 Change Oil Filter page 19
7.07 Alarm Oil Level page 20
7.08 Change Intake Filter page 20
7.09 Maintenance of Intermediate Separators page 21
7.10 Carbon Filter for Breathing Air page 21
7.11 Carbon Filter Cartridge page 22
7.12 Lifetime Filter Cartridges Charts – PAC FILTER 1, PAC FILTER 2 and PAC FILTER 3 page 23
7.13 Pressure Maintaining Valve page 25
7.14 Heads and Compression Valves page 25
7.15 Valve Replacement – First Stage page 26
7.17 Valve Replacement – Second Stage page 26
7.18 Valve Replacement – Third Stage page 27
7.19 Safety Valves page 27
7.20 Filling Valves and Filling Hoses page 28
7.21 Automatic Condensate Drain page 28
7.22 Automatic Stop System page 29
7.23 Use of the Electronic Control Panel page 29
7.24 Visible Alarms and Actions page 32
7.25 Special Waste Disposal page 32
7.26 Trouble-shooting page 33

8 SPARE PARTS page 34

Exploded View Drawing Driving Gear page 34
Exploded View Drawing Driving Gear page 35
Exploded View Drawing Crankcase with Accessories page 36
Exploded View Drawing First Stage page 37
Exploded View Drawing Second Stage page 38
Exploded View Drawing Third Stage page 39
Exploded View Drawing Filter Separator page 40
Exploded View Drawing Filter Separator page 41
Exploded View Drawing Cooling System page 42
Exploded View Drawing Filter Housing PAC FILTER 1 page 43
Exploded View Drawing Filter Housing PAC FILTER 2 page 44
Exploded View Drawing Filter Housing PAC FILTER 3 page 45
Exploded View Drawing Filling Valve 300 Bar page 46
Exploded View Drawing Filling Valve 200 Bar page 47
Exploded View Drawing Filling Devices with Connections page 48
Exploded View Drawing Automatic Condensate Drain page 49

9 MAINTENANCE SCHEDULE TABLE page 50

1 BASIC INFORMATION

1.01 WARNING SYMBOL EXPLAINED:

This manual contains special messages to bring your attention to important information regarding safety and proper operation of the machine. The symbol below is placed in different parts of the manual next to paragraphs that all users must be fully familiar with. Make sure you read all the information carefully to avoid injury and/or machine damage.

1.02 PRECAUTIONS:

The compressors are manufactured in accordance with the EC Machinery Directive 2006/42/EC, in accordance with the Law on General Product Safety dated 01/05/2004 on noise emissions and in accordance with the Machinery Directive, Annex I, Section 1.7.4. and following. The machine is constructed in a workmanlike manner and in accordance with technical and operational aspects of safety management.

NARDi COMPRESSORI also declares that the compressor has been subjected to a compliance pressure test, certifying with our 'DECLARATION OF CONFORMITY" that the product complies with Pressure Equipment Directive 2006/42/EC.

Before using the compressor we recommend reading carefully the following indications:
1. Read carefully the manual for the proper operation of the compressor.
2. Do not allow the air that comes out from the compressor to be directed to people or animals.
3. Do not operate the compressor in damp places and/or places without good air ventilation.
4. Make sure the compressor is placed in a stable position.
5. The maximum pressure of the compressor is clearly indicated on the compressor itself.
6. When using the compressor place it in a fresh, well ventilated location and away from heat sources.
7. The compressor can reach high temperatures during operation.
8. Do not to allow children to handle the compressor even when it is turned off.
9. Do not use the compressor to suck/compress gases other than ambient air or air with an oxygen content higher than 21%.

1.03 BRIEF INTRODUCTION:

PACIFIC E27 – EG27 is a high pressure compressor used to compress air for breathing in scuba diving, firefighting and military applications, among others. The maximum compression pressure can arrive at 420 bar and the exercise pressure can be 225 bar or 330 bar.

Main parts of the compressor:
- Pump Unit
- Electric Motor
- Series of separators and filter
- Filling hoses and connectors for cylinders
- Protection and anti-vibration system
- Automatic condensate drain*
- Electronic control system*
- Automatic start and stop system*

(*) These features can be optional based on the model and can be requested when ordering the compressor.

1.04 DESCRIPTION OF THE COMPRESSOR BLOCK:

The compressor block ***PACIFIC 28*** has a range of use for high pressure air up to a maximum of 330 bar (4700 psi). The compressor consists of three stages driven by three pistons. The first stage is in the center, the second is on the right (fig.1) and the third is on the opposite side.
The compressor block is a single body unit including several intermediate separators that are placed between the cooling serpentines (inter-cooler) of the various stages. The flywheel of the compressor does not require balancing because it is made of ultra-light alloy materials while the compressor has a crankshaft complete with counterweights that eliminate vibration due to dead times or non-compression times.
The movement of pistons is transmitted through the connecting rods using roller bearings. The roller bearings have a high workload and as a result the mechanism is very strong. Cylinders are made in aluminum with a barrel in cast iron inside.
This allows the machine to be the most technologically advanced product available in the market. The main advantage is that the cooling fins dissipate heat much faster and is more resistant to corrosion, compared to cast-iron.
The machine has a large capacity oil storage sump of 3,5 liters, a gear oil pump for forced-feed lubrication followed by an oil filter and a magnet that holds back all the iron particles inside the sump. This way the oil will remain clean which in turn makes the machine more reliable.

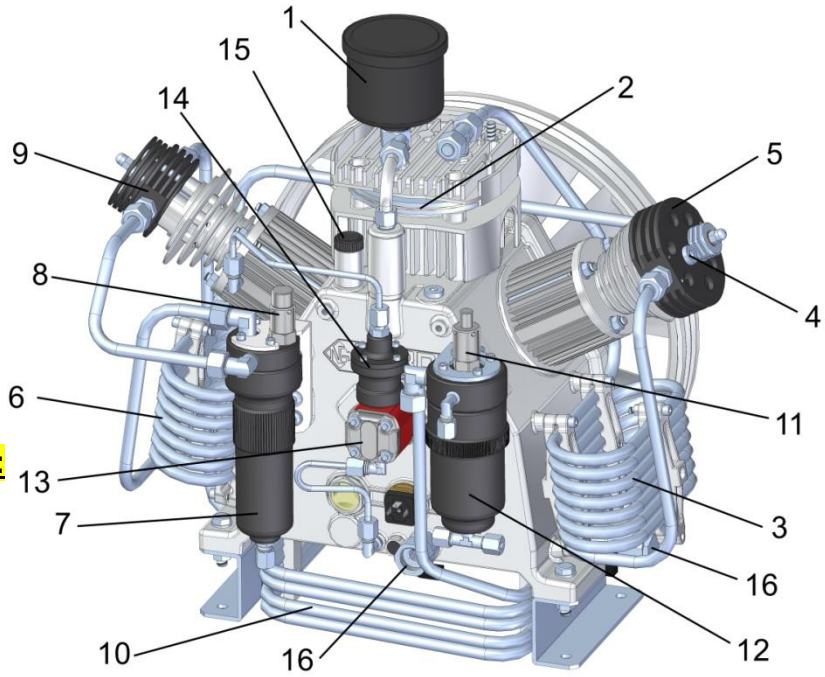

COMPRESSOR BLOCK COMPONENTS:

1. Intake filter 1st stage
2. Compression valve 1st stage
3. Intercooler 1st stage
4. Safety valve 1st stage
5. Head 2nd stage
6. Intermediate separator 2nd stage
7. Intercooler 2nd stage
8. Safety Valve 2nd stage
9. Head 3rd stage
10. Intercooler 3rd stage
11. Safety valve 3rd stage and relief valve
12. Intermediate separator 3rd stage
13. Gear oil pump for forced-feed lubrication
14. Oil filter
15. Oil refill plug
16. Oil sump drain plug and tap

1.05 DESCRIPTION OF PACIFIC E27 – EG27 :

The structure of the *PACIFIC E27 – EG27* is very robust, designed to suppress vibration discharging it on the ground and thus reducing up to 60% of noise. This is possible thanks to an internal thermo acoustic insulation that guarantees noise levels lower than 70db(A).
All the elements, the internal structure and the walls around the internal structure are painted with epoxy coatings which grant an extraordinary resistance to corrosion. This ensures longer lasting of the equipment and as a consequence it extends the life of the compressor block inside.
The air filtering system is placed in the front part of the compressor, in the outside, in order to simplify and expedite the replacement of the filter cartridge. It is possible to add a second filtering system (optional accessory) that can be placed next to the filtering system present in the compressor.
In the front, we also find the electric control panel and the final pressure gauge. Up to four filling valves can be used to connect filling hoses and filling valves. The condensate drain valve is placed in the back of the compressor.

COMPRESSOR COMPONENTS:

1. Electronic control panel
2. Final pressure gauge
3. Filling valves and hoses
4. Filtering System PAC FILTER 1
   (PAC FILTER 2 and PAC FILTER 3 are optional)

1.06 TECHNICAL DATASHEET PACIFIC E27 – EG27 :

TABELLA CARATTERISTICHE TECNICHE - TECHNICAL DATA						
Description	***Descrizione***	***Unità - Unit***	***PACIFIC E27***		***PACIFIC EG27***	
Working Pressure	Pressione di esercizio	PN	200	300	200	300
Charging rate	Aria Resa	L/min. – m^3/h – cfm	270 – 16,2 – 9,54		270 – 16,2 – 9,54	
Safety Valve Pressure	Pressione di esercizio	Bar – Psi	225-3200	330-4700	225-3200	330-4700
Compressor block	Gruppo pompante	Name – Nome	PACIFIC 28		PACIFIC 28	
Number of stages	Numero di stadi	N°	3		3	
Number of connecting rods	Numero di bielle	N°	3		3	
Pressure 1st Stage	Pressione 1° stadio	Bar / Psi	7,5 – 110		7,5 – 110	
Pressure 2nd Stage	Pressione 2° stadio	Bar / Psi	65 – 940		65 – 940	
Pressure 3th Stage	Pressione 3° stadio	Bar / Psi	225-3200	330-4700	225–3200	330-4700
Compressor Block Oil capacity	Capacità coppa dell'olio	Liter – gal(US)	3,5 – 0,924		3,5 – 0,924	
Speed Compressor	Giri Compressore	r.p.m.	1550		1550	
Oil Type	Tipo di Olio	Name – Nome	NARDI SYNTHETIC 150			
Environment working temperature	Temperatura ambiente di lavoro	°C / °F	From +5°C to +45°C / From +41°F to +113°F			
Max inclination of compressor	Max inclinazione del compressore	Grade – Gradi	5°		5°	
Max operating height	Max altezza dal livello del mare	Meter / Feet	2000 / 6500		2000 / 6500	
Power pump weight	Peso gruppo pompante	Kg. / lb	47 / 103		47 / 103	
Dry and oil intermediate separator	Separatori acqua olio	N°	2		2	
Filtration	Sistema Filtrante	Name – Nome	PAC 1 **		PAC 1 **	
Interstage coolers and after coolers	Tubi di raffreddamento	Material – Materiale	Acciaio Inox – Stainless Steel			
Breathing air	Aria respirabile	Directives - Direttive	UNI EN 12021:2000 – ANSI/CGA E – Z180			
Filling time single cilynder 10 L. 0-200 Bar	Tempo ricarica bombola 10 L. 0-200 Bar	Min.	07': 26''		07': 26''	
Motor	Motore	Tipe	Three Phase		Gasoline	
Operating Voltage	Tipo di Voltaggio	Volt / Hz	230 → 690 / 50-60		-	
Power	Potenza Motore	Kw	5,5		6,7	
Noise level	Pressione Sonora	dB	80		88	
Type of enclosure	Protezione	IP	54		-	
Current Rating	Assorbimento	Ampere	19 (230) – 11 (400)		-	
Weight	Peso	Kg. / lb (US)	118 / 260		118 / 260	
** Standard filtration system - ** Sistema filtrante standard						

2 SAFETY REGULATIONS FOR THE USE OF THE COMPRESSOR

2.01 IDENTIFICATION OF SAFETY REGULATIONS FOR THE OPERATOR:

It is very important to check and be familiar with the potentially dangerous parts of the machine before putting it into operation. In order to facilitate this, warning labels have been placed to identify the following: High pressure, pressure valve, rotating fans, hot surfaces, etc.

Additionally, some components are mounted on the machine for accident prevention and global security that in the event of malfunction or breakdown intervene so as not to cause danger to the life of the operators.

These components should always be present and **cannot** be removed or modified. In case of need contact our technicians. The operator should make sure that the equipment and the safety components are in good working condition at all times.

The compressor needs to be checked regularly by the operator and by technicians who will replace any worn or damaged components.

2.02 SAFETY REGULATIONS FOR THE OPERATOR AND FOR THE PROPER USE OF THE COMPRESSOR:

The operators of the compressor must have technical knowledge about breathing air, be aware of current regulations and be familiar with the operation of the machine perfectly. In the case of delegation of work, the operator of the compressor should take all necessary measures to inform the next operator of all the maintenance operations required.

The compressor is designed to produce compressed breathing air in accordance with regulation DIN EN 12021.

It draws air from the surrounding environment (the operator must make sure intake air is devoid of fumes and / or harmful gases) and passing through an air intake filter it begins the cycle of compression / filtering until the air arrives at the cylinder in high pressure.

2.03 SAFETY ESSENTIALS:

- **Fill only inspected and tested cylinders and never exceed their working pressure.**
- **The compressor must not take in fug, frowst or polluted air, it should not be placed in areas where there is dust, danger of explosion, corrosion or fire.**
- **If the compressor is driven by a combustion engine, its use is prohibited in closed environments. In any case, make sure that air intake is opposite to the direction of the fumes coming from the engine. Refueling must be done only when the machine is shut off.**
- **Make sure that when you service the machine or replace any spare parts on the compressor, it is not pressurized and the power cable is disconnected from the power line.**
- **Regularly replace air filter cartridges only with genuine products from Nardi Compressori (tested material).**
- **Drain the condensate regularly if the compressor has a manual drain. In the case of automatic condensate drain check that this happens in periods not exceeding 10 minutes. Check daily the operation by manually draining the condensate.**
- **When the compressor is not in use turn the power off, do not tug at the wire but use the plug to unplug it. Make sure the power cable does not go against any sharp edges or bend at an angle (in this case, it is recommended to use an extension).**
- **Periodically check the condition of the filling hoses (hoses for high pressure), especially near the joints and if minor defects are present replace them. In any case, hoses must be replaced**

every 12 months.

- **Check regularly the condition of the fittings.**
- **Do not repair damaged parts if you do not have original parts from Nardi Compressori.**
- **Do not modify the machine except with express written authorization from Nardi Compressori.**
- **In case of visible wear and tear of any components of the compressor, do not use the machine until the worn parts are replaced with original parts. Check if there is additional damage to other parts of the compressor.**
- **Before starting the machine, make sure no one is in contact with it.**
- **Be careful about any moving parts and do not get in contact with them.**
- **Do not change the ventilation system of the compressor and make sure it is positioned so as to ensure the proper circulation of air.**
- **When starting the compressor, make sure that the sense of rotation of the compressor is equal to that indicated by the arrow on the fan wheel cover.**

2.04 GENERAL SAFETY CONSIDERATIONS:

1. The operator qualified to use the compressor, shall be aware of all the provisions and devices to control the machine, tools, indicators and all the information on the various stickers/labels attached to the machine.

2. Always have first aid supplies, and a CO2 fire extinguisher. Make sure the extinguisher is fully charged and ready to work at all times.

3. When operating the compressor, use appropriate protective clothing such as safety shoes, goggles, gloves and so on.

4. Always disconnect the power cable when performing operations within the compressor, never perform any operations on it with the power on while the compressor is in operation.

3 WARRANTY AND ASSISTANCE

3.01 WARRANTY OF THE COMPRESSOR:

NARDI COMPRESSORI warrants the **PACIFIC E27 – EG27** for a period of twelve months from the date of purchase, indicated on the label fixed on the compressor.
During the time of production and testing a label is fixed on the machine showing that it is **in conformity with the standards of the European Union** showing the **CE** marking. The warranty is voided if this label is by any reason removed or altered in any way.
For the warranty to be valid, it is necessary that the own complies with the provisions of the contract and that the compressor is used as specified by Nardi Compressori and is not been altered or modified in any way without the agreement and authorization of NARDI COMPRESSORI.
The warranty is not applicable when:

- The machine has not been used properly (as indicated in this manual).
- Non-guaranteed consumable materials and materials of periodic maintenance are used, particularly if used improperly.
- Non original NARDI COMPRESSORI spare parts and replacements are used.
- Gases other than air are sucked/compressed or air with oxygen content higher than 21%.

The replacement of defective parts under warranty will be performed free of charge at Nardi Compressori's location in Montecchio Maggiore or at the location of our authorized dealers.
Repairs and replacements made by NARDI COMPRESSORI or from an authorized dealer during the warranty period, do not prolong the duration of the warranty thereof.
If the repair takes place outside Nardi Compressori, the cost of shipping of replacement parts is for account of the buyer (replacement of defective parts must be performed only by technically trained personnel that NARDI COMPRESSORI's trained staff has assessed/trained and approved before the repair job is done).
If the replacement of the part requires a technician from NARDI COMPRESSORI, travel expenses will be borne by the buyer.

3.02 MAINTENANCE AND ASSISTANCE:

To order spare parts please contact or visit our dealers in your area. In case of difficulty in finding a spare part, contact directly NARDI COMPRESSORI. We are available for any queries or further information and we will put you in contact with skillful technical staff to help you. If you need service or assistance, please contact us directly at:

NARDI COMPRESSORI
info@nardicompressori.com or by fax Nr. +39.0444.151922

4 INSTALLATION

4.01 UNPACKING AND HANDLING:

The compressor is shipped on pallets and is covered by a box and finally fastened with strapping. After unpacking it is important to check if the compressor has suffered any damage during transit. If any damage is present, it is important to inform the carrier and the seller as soon as possible but no later than 7 days after delivery.
The compressor PACIFIC E27 – EG27 is designed to facilitate handling. In fact, if you look at the bottom, you will notice it has an opening which allows it to be picked up using a forklift.
The compressor is mounted on anti-vibration mounts to avoid transmitting vibration to other things nearby. At any rate, it must be positioned in a stable location. The pump unit is not resistant to the permanent exposure to marine corrosion. In the event it comes into contact with corrosive agents it is recommended to clean the surface and protect it with anti-corrosive spray. Be careful of any electrical parts at all times.

4.02 PLACEMENT IN OPEN AIR:

In order to obtain good quality breathing air it is very important to position the compressor in open places. The compressor must not suck the exhaust fumes of any internal combustion engine.
If the situation makes this impossible, it is necessary to use an extension for the aspiration of fresh air to be set higher and as distant as possible from harmful gases/fumes and away from flammable agents.
Check continuously wind direction and fumes coming from the engine.
The compressors must be positioned in a cool place protected from the weather.
Check Chapter 4.03 for the proximity of walls and roof.

If your compressor is driven by an internal combustion engine it is very important check often the wind direction of the fumes and exhaust gases coming from the engine.
The compressors must be positioned in such a way that the fumes and exhaust gases are not sucked by the compressor. If you are not sure about this it would be advisable to us an extension pipe to place the air inlet at a save location. The compressor driven an a combustion engine must not be used in closed environments.

4.03 PLACEMENT IN A CLOSED ROOM AND MINIMUM REQUIREMENTS OF THE ROOM:

The compressor placed in a room, requires a continuous recirculation of fresh air.
Inside the room there should be no liquid that can evaporate (solvents, additives, etc.). **The compressor room must be an absolutely "no smoking" area.**
The compressor must draw unpolluted air and it is preferable to place it in the vicinity of open windows during its operation so as to ensure recirculation of air both to ensure the quality of the air during the compression phase as for the cooling of the compressor.
The minimum requirements of the room are the following:

- The temperature of the room must not be lower than 5° C and should not be higher than 45° C with proper ventilation (see Table A).
- The room should be dry and clean, there should be no dust that can be sucked by the compressor.
- If in the same room two or more machines were placed make sure that the size is adequate (see Table C).
- Place the compressor preferably in the coldest area of the room. In the case of natural ventilation make sure that the compressor is as close as possible to the fresh air intake and that it has the appropriate dimensions. In addition to this there must be an opening in the upper part of the room that gives the possibility to dispose of hot air, and also that it has the appropriate size (see Table A and Fig. 2). The two openings should not be on the same wall, otherwise make sure to direct hot air upwards.

Table A : Minimum room size with natural ventilation.

Volume and Height of the Room					
Volume >50 m³ - Height >2,3 m		Volume >100 m³ - Height >3 m		Volume >200 m³ - Height >4 m	
Intake (A)	Outlet (B)	Intake (A)	Outlet (B)	Intake (A)	Outlet (B)
0,95 m²	0,78 m²	0,63 m²	0,52 m²	0,25 m²	0,21 m²

Tab. A

Tab. B

Minimum Distance from the Walls	
C	0,10 m
D	0,50 m
E	1,00 m

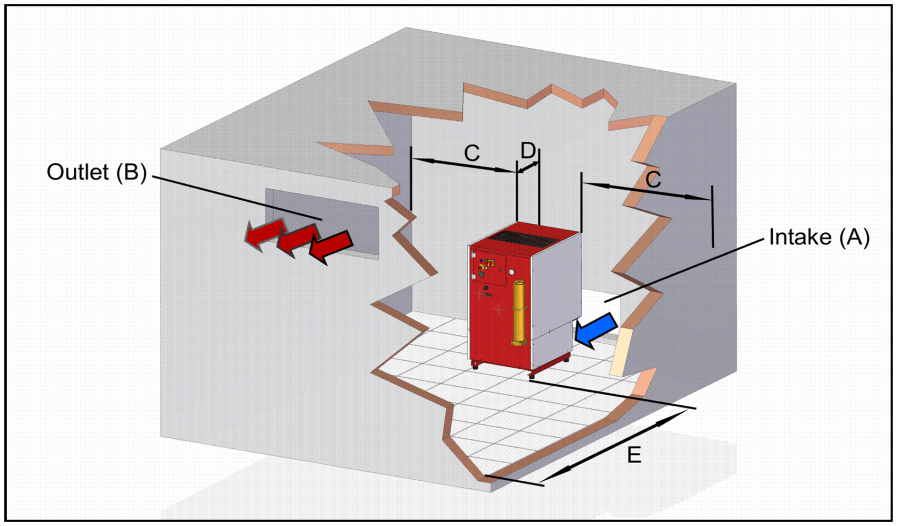

Fig. 2

CAUTION: The size of the openings depend on the heat sources and machinery placed in the room. The dimensions indicated in Table A are for a compressor PACIFIC 35 M and vary depending on the volume and height of the room. The height of the room should not be lower than 2.3 meters and the minimum distance from the top panel of the compressor to the roof must be 1 meter.

If in the same room two or more machines are placed you have to calculate the ventilation adequate for both machines to work properly. Use the formula on Table C for your calculation.

Volume of Air Intake (m²) = Number of Compressors x Volume of Air Required for the Room (m²) x 1,6

Tab. C

If the room volume is lower than indicated, and vents for air circulation less than those indicated, it is mandatory to insert artificial ventilation (see section 4.04)

4.04 ROOM WITH ARTIFICIAL VENTILATION:

In the case of artificial ventilation it is important to check that the fresh air inlet is positioned at the bottom and the outlet is positioned at the top in two different walls. In the case of extractor fan make sure that the flow rate is equal to or greater than that indicated by calculation (see Table D).

Minimum air circulation (m³/h) = Capacity of the compressor (l/min) x 7,5

Tab. D

To ensure that there is sufficient ventilation and that the fan flow rate is adequate simply measure the speed of the outgoing air (m / sec) and the section of the exhaust duct where the measurement is made (m²) and then calculate it

using the formula in Table E.

Air circulation (m³/h) = Cross Sectional Area of the Duct (m²) x Air Speed (m/sec) x 3600

Tab. E

To calculate the dimensions of the intake duct, it is recommended that the speed of the incoming air is not less than 5 m / sec and should not be more than 10 m / sec. We suggest using the formula in Table F to calculate the cross sectional area of the duct with an air speed of 5 m / sec.

Cross Sectional Area of the Duct (m²) = Minimum air circulation (m³/h) / 5 (Air Speed m/sec) x 3600

Tab. F

4.05 INTAKE PIPE :

If you decide to place the intake of the compressor in a different location of that of the compressor itself, you can connect a pipe to the intake of the compressor. It is important that this pipe has a diameter of 40 mm or more. Make sure it is not plugged or bent so as to create a bottleneck. At its end it is recommended to put a filter.
Once connected check the time to refill cylinders to make sure that the compressor has not decreased the air delivery.
If this situation is present, check the pipe because the compressor may be going into depression and the causes can be:

- Pipe chokes
- Pipe is too long (In this case the cross sectional area of the pipe should be increased).

4.06 ELECTRIC LINE CONNECTION:

For the electrical installation you must follow these steps:

- In this manual you will find a diagram of the electrical control panel of the compressor that indicates how to connect the compressor to the mains.
- Have an electrician check that the system is compliant and that it can support the maximum power draw of the compressor shown under the CE label by NARDI COMPRESSORI.
- We recommend installing a circuit breaker or fuse adapted to the power consumption of the motor.
    - Check that the current reaches the voltage required by the compressor and that the plug that is used is not undersized.
    - **CAUTION**: When connecting the plug make sure that the fan of the compressor spins in the exact direction of the arrow on the fan wheel cover. To reverse the rotation, just reverse two of the three phases of the plug. Your compressor may have phase sequence problems (wrong sequence on phase connection), in this case it will not turn on until the threads of the phase are inverted as indicated above.
    - Ensure that the ground wire is connected correctly to the plug and to the electrical system.
    - If you change the mains cable make sure it is of the right size.

5 QUICK STARTING GUIDE

WARNING: This QUICK STARTING GUIDE does not replace the Operator's and Maintenance Manual, but is intended to help the operator start the compressor, with quick and practical advice, which should be followed with extreme caution and only after having read this manual in its entirety. *We remind you to perform periodic maintenance of the compressor, to avoid unwanted problems.*

Getting Started:

SEQUENCE
OR
PHASE FAILURE

- Place the compressor in the desired location
- Connect the condensate drain hose at the back of the compressor
- Check the oil level
- Check that the cartridge is inserted inside the filter housing
- Plug the power cable into the electrical outlet
- Turn the line switch on the electronic panel to the position I - ON
- Pay attention to the direction of rotation of the electric motor If the plug was connected the wrong way the electronic panel will show "SEQUENCE OR PHASE FAILURE" . In this case, invert two of the three wires on the plug of the mains cable.
- To check if it is rotating in the correct direction: If the air comes out from the top of the compressor then it is rotating in the right direction while if the air comes out from the bottom of the compressor then it is rotating in the wrong direction.

Preparation for compressor with petrol engine:

- Place the compressor in the desired location
- Connect the condensate drain hose at the back of the compressor
- Check the oil level
- Check that the cartridge is inserted inside the filter housing
- Check that there is fuel in the tank (never refuel when the engine is hot)
- Turn the selector I - ON
- Pull the starter rope if the compressor has manual start or turn the key if the engine has an electric starter.
- You can see the correct direction of rotation in the picture above. Make sure that air comes out from the top of the compressor, and not from the bottom.

6 OPERATION AND USE

6.01 PREPARING TO START THE COMPRESSOR:

This compressor has been designed to compress ambient air. It is forbidden to modify the intake to compress air other than ambient air. The compressor is constructed to compress air with a percentage of oxygen content which must not exceed 21%. The use of the compressor to draw/compress air with a higher content of oxygen or using other gases, can lead to breakage or to EXPLOSION of the compressor.

All compressors are tested by NARDI COMPRESSORI before delivery, but for powering it on you need to follow these safety steps:

- Before turning on the machine, all the operators of the compressor must read carefully the User's and Maintenance Manual.
- If the compressor has not been in operation for a period longer than twelve months we recommended changing the oil, changing the intake filter and doing a checkup of the compressor by a technician.
- Test the condensate drain valve by pressing the button PURGE and test the emergency button on the electronic control panel.
- Check that the oil level be at MAX (full). If the compressor is driven by a fuel engine also check the oil level of the fuel engine reading the relevant manual. Before powering on the compressor, make sure the fuel tank is full. **Never refuel the engine's fuel tank while the compressor is running.**
- Every time you turn on the compressor follow these steps and if something is not working properly, do not turn on the compressor, and run a maintain check or contact a technician to solve the problem.

6.02 STARTING THE COMPRESSOR:

Compressor driven by an electric motor with Automatic Control System:
This model is provided with an electronic control panel which controls the compressor in all its functions.
Before starting the compressor, follow all the steps in 6.01 above and after press the START button. Automatic condensate drain cycles will begin to execute the opening of the valve every 6 minutes.
At maximum pressure, the machine will automatically shut down.
Press the STOP / emergency button to stop the compressor (once pressed the emergency button needs to be reset).

6.03 USE OF FILLING VALVES:

CAUTION: Filling valves are very delicate components that allow you to connect the cylinders to the compressor. Filling valves must be used with care, should not be hit, should not be cleaned with solvents or harmful products and most importantly do not exceed the pressure for which they are designed.

Normally 225 bar filling valves are attached to a compressor.

To attach the filling valve to the cylinder you must follow these steps:

- Make sure that the compressor is turned off and that the filling valve and the cylinder valve are closed.
- Attach the filling valve to the cylinder.
- Open completely the cylinder valve.
- Open the filling valve.
- Start the compressor and fill the cylinder.
- At maximum pressure, close the cylinder valve and the filling valve.
- Blow-off any residual air between the cylinder and the filling valve and disconnect the cylinder valve.

If you need to use the compressor at a pressure higher than 225 bar Nardi Compressori can provide the material required to refill at higher pressure with different filling valves, connectors and safety valves with higher calibration.

7 MAINTENANCE AND SERVICE

7.01 MAINTENANCE OPERATIONS:

Your compressor needs regular maintenance and service over time. In addition to stretching the life of the machine, regular maintenance keeps it performing consistently and running efficiently.
During its work cycles the compressor requires regular maintenance that must be performed by technicians trained by Nardi Compressori.
In case maintenance is not performed by our technicians, it is very important to follow the guidelines of the maintenance checklist in all its parts.
In the maintenance checklist you will find all the maintenance operations scheduled that should be performed based on the hours of operation of the compressor.
It is very important to register any and all maintenance operations performed on the compressor, in order to keep a historical record of the parts that have been replaced, the date maintenance was done, the hours of operation of the machine up to the date maintenance is done and the signature of the qualified technician who serviced the machine.

IMPORTANT: **All maintenance operations must be performed by the technical staff of NARDI COMPRESSORI or by qualified technical staff.**

IMPORTANT: **All maintenance operations must be performed with the machine switched off and the power cable disconnected.**

7.02 LUBRICATION SYSTEM:

NARDI compressors have two different lubrication systems:

- **Splash Lubrication:** This method of lubrication is done mechanically with the movement of the connecting rod. With every rotation, a dipper, at the bottom of the connecting rod is submerged in oil at high speed. When the dipper emerges from the oil sump in the lower part of the crankcase, the oil is thrown upward as droplets or fine mist, providing adequate lubrication to the cylinders and the crankshaft.
- **Force-feed Lubrication:** This type of lubrication is done through an oil gear pump that force-feeds oil and that is driven by the shaft. Oil sucked from the sump is pumped to the piston of the last stage and filtered by a micron filter. In its movement the oil pump sprays oil to all moving parts.

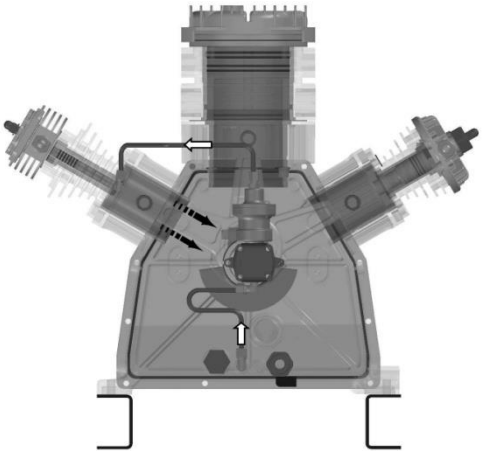

7.03 OIL:

Oil is a very important component for the life of the compressor over time. Nardi Compressori has studied in detail the compressor so that it has a large capacity oil sump and oil filter. A magnet has been fixed on the case to attract all metallic impurities that settle at the bottom of the case.
Nardi Compressori recommends using our oil that has been designed and tested specifically for this machine. The compressor is usually supplied with oil to be used only with non-mixed air (21% O^2).

Oil Characteristics:

- Low carbon deposit
- No carbonizing effect
- Good anticorrosive properties
- Physiological and toxicological suitability

7.04 OIL CHANGE:

The steps for changing the oil of the compressor are as follows:

- Make sure you have enough oil on hand to make the change.
- Switch the compressor on for 15 - 20 minutes to heat the oil and make it more fluid.
- Remove the oil refill plug along with the oil breather extension.
- Remove the oil drain plug and before opening the tap make sure you have a container to catch the exhausted oil.
- Close the tap and replace the oil drain plug.
- Pour the new oil slowly down the oil filler neck.
- Make sure that it reaches the maximum level (MAX).
- Do not exceed this level.
- Close the oil refill plug.

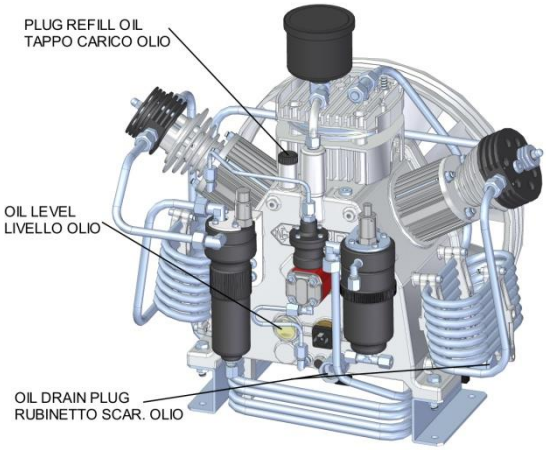

7.05 CHANGE TYPE OF OIL:

To avoid serious damage to the compressor when changing the type of oil, you must strictly follow the following steps:

- Follow the steps on the oil change Chapter 7.04.
- Change or clean all parts that have old oil.
- After 10 hours of operation of the compressor check if there is contamination.
- If the oil has been contaminated change it again.
- Do not mix different types of oil and always use the same type of oil.

7.06 CHANGE OIL FILTER (Only for compressors with oil pump):

The steps for changing the oil filter are as follows (this is to be performed at every oil change):

- Unscrew the nut of the fitting that holds the tube that delivers the oil to the last cylinder using a 14mm wrench and disconnect it.
- Unscrew the four screws of the oil filter housing using a Phillips screwdriver.
- Lift the oil filter housing cap with the tube attached to it and remove the filter.
- Check if it is necessary to change the O-ring on the oil filter house housing.
- Close everything, turn on the compressor and make sure there are no oil leaks.

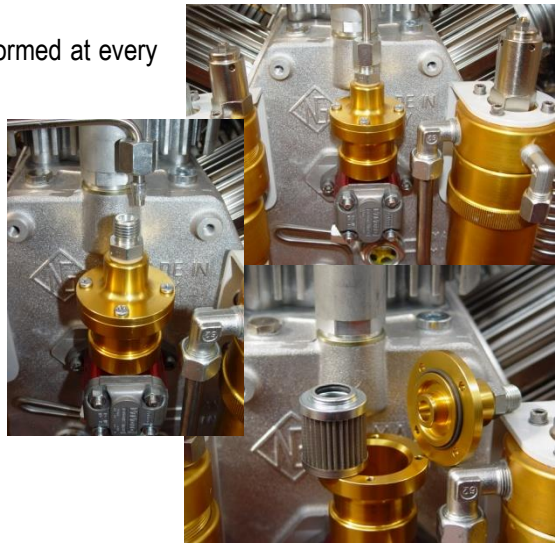

7.07 ALARM OIL LEVEL:

When the oil level drops below the minimum threshold, an alarm (visible and acoustic), is triggered, with a message on the display that shows the scarcity of oil in the compressor

.

It is necessary to do a top up of oil to the compressor, as described above, up to the maximum level. Press "RESET" on the front of the electronic control panel, so as to reset the alarm and then "START" to start the compressor. In the event that, within a short time, the oil level alarm is triggered again, you need to call a technician to check any possible anomaly.

7.08 CHANGE INTAKE FILTER:

The filter traps any impurities present in the environment.
It must be replaced at regular intervals as indicated in the maintenance checklist.
It should not be washed but replaced.
The steps for changing the filter are as follows:

- Release the latches on the lid and remove the filter cartridge.
- Clean with a damp cloth inside the filter housing and the cap.

Insert the new filter cartridge and close the lid.

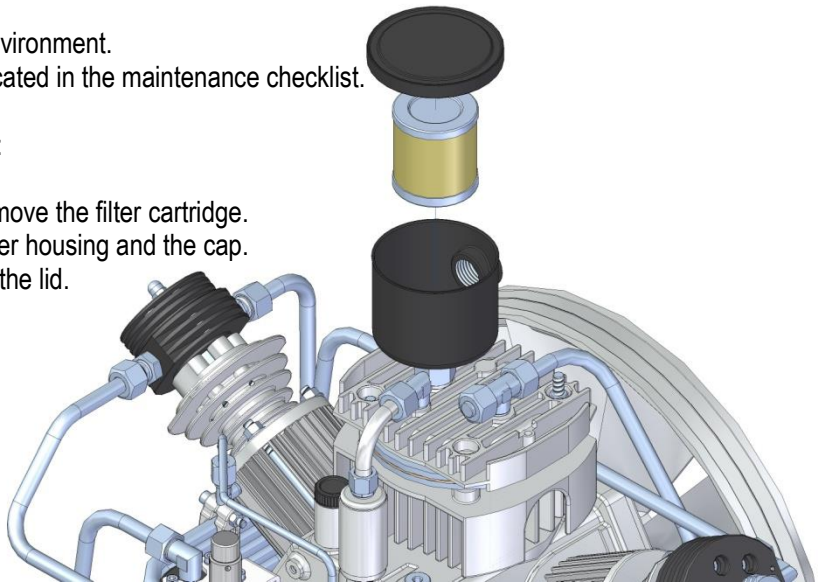

7.09 MAINTENANCE OF INTERMEDIATE SEPARATORS:

In the compression phase the air undergoes a temperature increase that from one stage and the other is cooled by a series of cooling coils (intercooler). This sudden thermal change produces condensation which is eliminated by intermediate separators. Within the intermediate separators there are filtering elements that need to be changed periodically.

The steps for changing the filtering elements are as follows:

- With the compressor switched off, depressurize the separators using the condensate drain tap.
- Unscrew the bottom part of the separators.
- Unscrew the filtering element and replace it with a new one.
- Wipe the bottom of the separator housing with a damp cloth and make sure there is no corrosion.
- Replace the O-rings.
- Close the separator securely.

When used at a pressure exceeding 300 bars, intermediate separators must be replaced after 10000 hours.

7.10 CARBON FILTER FOR BREATHING AIR:

The carbon filter is used to remove the water and oil residues that have passed the intermediate separators. The filter operates in a chemical fashion, not mechanical, with materials that absorb water and oil particles, making the compressed air breathable in compliance with European Standard DIN EN 12021

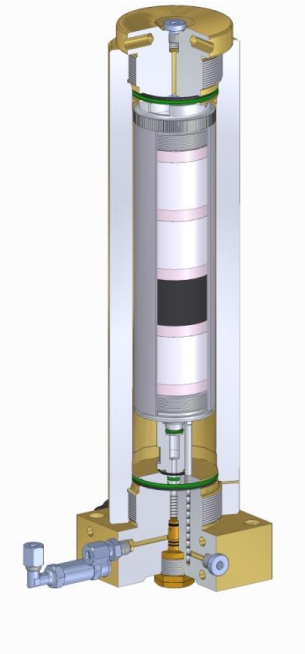

The filter has two safety features. The first consists of a hole in the filter body (safety cartridge bore) that is closed when the cartridge is inserted. Its importance is that it makes it impossible to fill the cylinders if the cartridge is missing. The second safety feature is a milling cut on the thread of the filter body (safety de-pressure filter). In the case the filter head came accidentally unscrewed without depressurizing the compressor; this milling cut provides a discharge path for the air that is contained inside the filter to be released.

The life of the components of the filter is determined by the number of work cycles since the filter base and the filter head are subjected to dynamic loads due to pressurization and depressurization of the filter. Nardi Compressori recommends that a technical inspection be performed every 500 hours of operation. The filter cartridge should be replaced once exceeded the 8000 cycles at 300 Bar or 21000 cycles at 225 Bar. With a rough estimate of 4 cycles per hour at 300 bar, the filter cartridge must be replaced after 2000 hours of operation. At 225 Bar, the filter cartridge must be replaced after 5000 hours of operation.

7.11 CARBON FILTER CARTRIDGE:

There are two types of cartridges : for electrical compressors (picture on the left) the filter removes water and oil residues. For compressors driven by fuel engines (picture on the right), in addition to water and oil, the filter removes CO.

The steps for the replacement of the cartridges are as follows:

- Depressurize the entire system before performing any operation.
- Unscrew the filter head and handle it carefully to avoid damaging it.
- Unscrew the cartridge.
- Wipe with a clean cloth the inside of the filter.
- Insert the new cartridge inside the filter housing.
- Check the condition of the O-ring of the filter and change it with an original O-ring, if damaged.
- Screw the filter head by hand (do not use any tools).

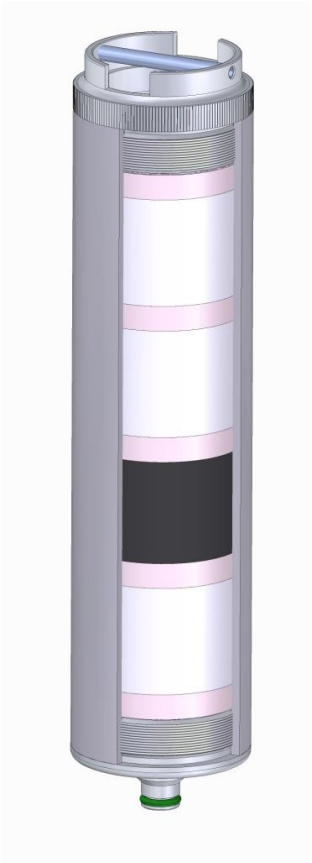

The life of a cartridge depends upon many factors including environmental conditions, ambient air humidity, temperature, air flow rate of the compressor, the size of the cartridge itself, etc.

The new cartridge should be kept in dry environments. Cartridges are vacuum packed to maintain reliability and the package must remain closed until the cartridge is ready to use.
The cartridge should always be changed if it has exceeded an idle time of 2 months mounted on the compressor without being used. It is recommended you use only original materials supplied by Nardi Compressori. The users who wish to regenerate their cartridges have to be well prepared to do this and should use only materials from Nardi Compressori.
The tables provided by us have been developed using constant parameters and apply to new cartridges, not regenerated, as supplied by Nardi Compressori.

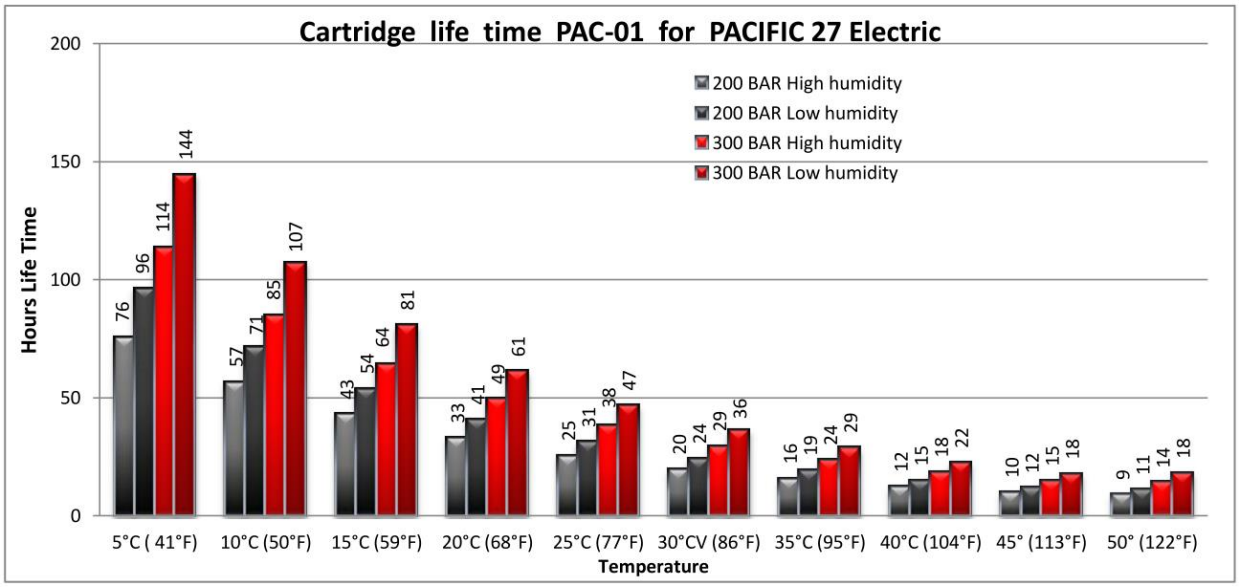
Cartridge life time PAC-01 for PACIFIC 27 Electric
200 BAR High humidity
200 BAR Low humidity
300 BAR High humidity
300 BAR Low humidity
Hours Life Time
0
50
100
150
200
76 96 114 144
57 71 85 107
43 54 64 81
33 41 49 61
25 31 38 47
20 24 29 36
16 19 24 29
12 15 18 22
10 12 15 18
9 11 14 18
5°C (41°F)
10°C (50°F)
15°C (59°F)
20°C (68°F)
25°C (77°F)
30°CV (86°F)
35°C (95°F)
40°C (104°F)
45° (113°F)
50° (122°F)
Temperature

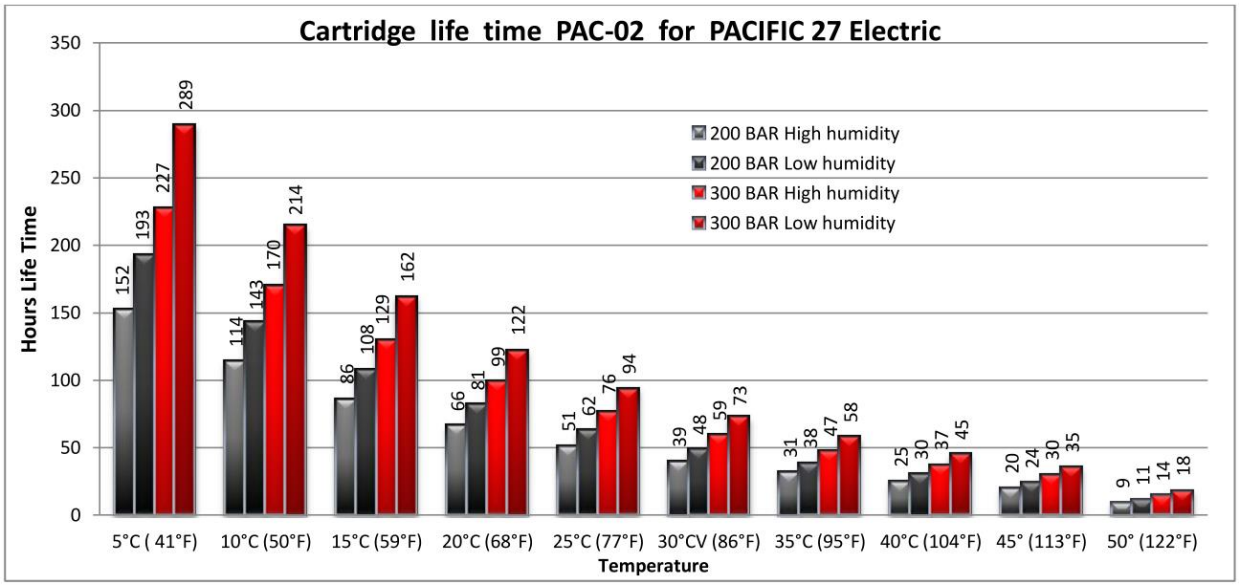
Cartridge life time PAC-02 for PACIFIC 27 Electric
200 BAR High humidity
200 BAR Low humidity
300 BAR High humidity
300 BAR Low humidity
Hours Life Time
0
50
100
150
200
250
300
350
152 193 227 289
114 143 170 214
86 108 129 162
66 81 99 122
51 62 76 94
39 48 59 73
31 38 47 58
25 30 37 45
20 24 30 35
9 11 14 18
5°C (41°F)
10°C (50°F)
15°C (59°F)
20°C (68°F)
25°C (77°F)
30°CV (86°F)
35°C (95°F)
40°C (104°F)
45° (113°F)
50° (122°F)
Temperature

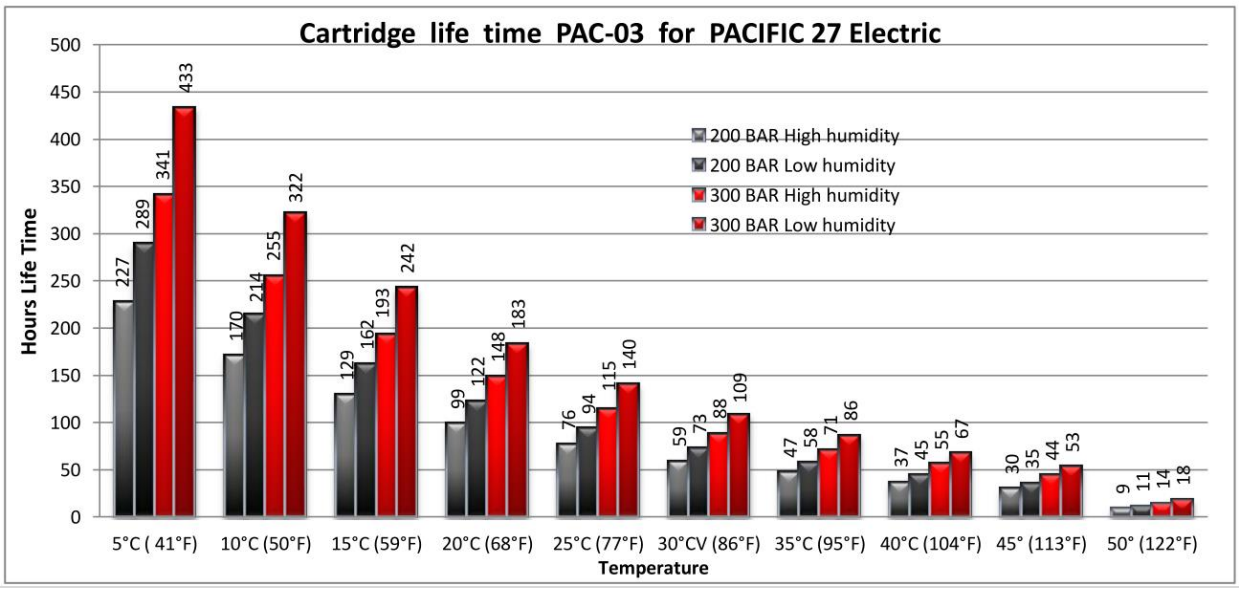
Cartridge life time PAC-03 for PACIFIC 27 Electric
200 BAR High humidity
200 BAR Low humidity
300 BAR High humidity
300 BAR Low humidity
Hours Life Time
0
50
100
150
200
250
300
350
400
450
500
227 289 341 433
170 214 255 322
129 162 193 242
99 122 148 183
76 94 115 140
59 73 88 109
47 58 71 86
37 45 55 67
30 35 44 53
9 11 14 18
5°C (41°F)
10°C (50°F)
15°C (59°F)
20°C (68°F)
25°C (77°F)
30°CV (86°F)
35°C (95°F)
40°C (104°F)
45° (113°F)
50° (122°F)
Temperature

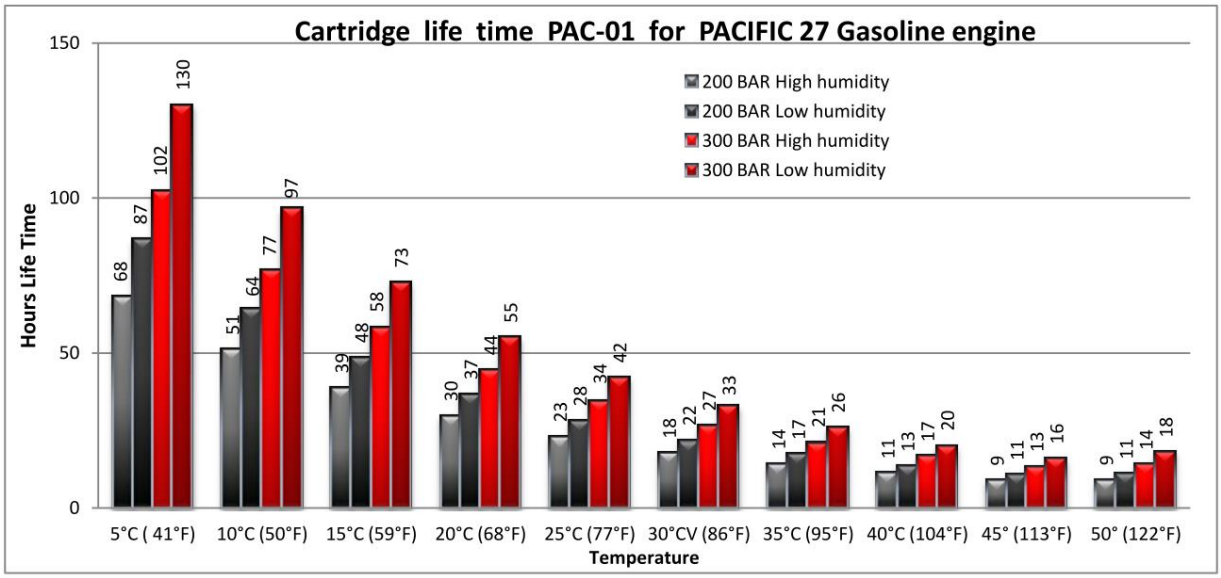
Cartridge life time PAC-01 for PACIFIC 27 Gasoline engine
Hours Life Time
Temperature
200 BAR High humidity
200 BAR Low humidity
300 BAR High humidity
300 BAR Low humidity
5°C (41°F) 68 87 102 130
10°C (50°F) 51 64 77 97
15°C (59°F) 39 48 58 73
20°C (68°F) 30 37 44 55
25°C (77°F) 23 28 34 42
30°CV (86°F) 18 22 27 33
35°C (95°F) 14 17 21 26
40°C (104°F) 11 13 17 20
45° (113°F) 9 11 13 16
50° (122°F) 9 11 14 18

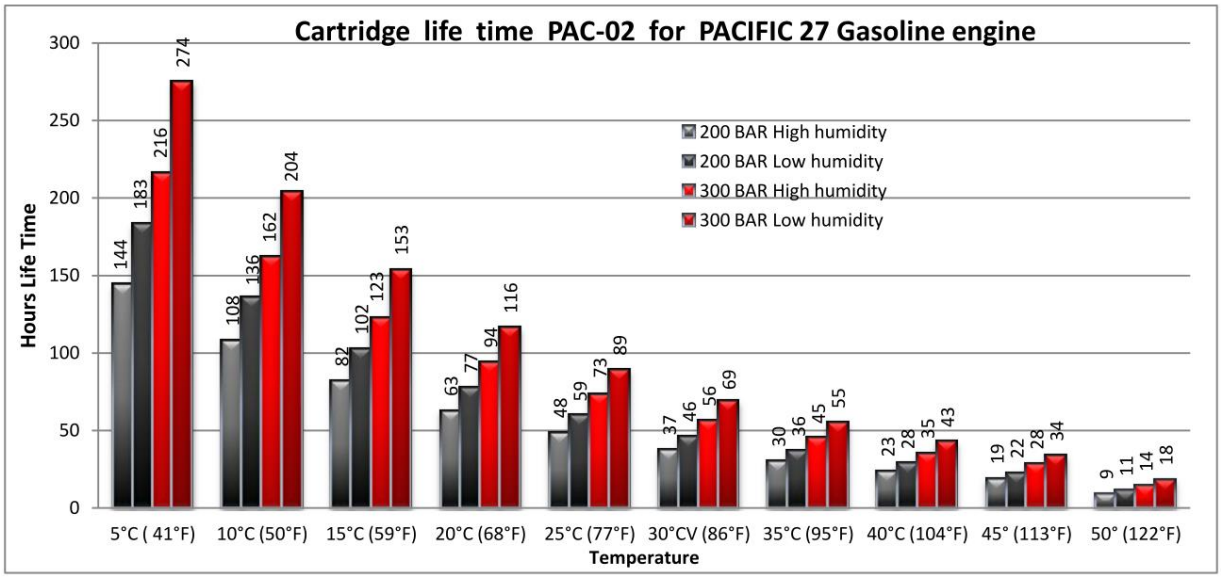
Cartridge life time PAC-02 for PACIFIC 27 Gasoline engine
Hours Life Time
Temperature
200 BAR High humidity
200 BAR Low humidity
300 BAR High humidity
300 BAR Low humidity
5°C (41°F) 144 183 216 274
10°C (50°F) 108 136 162 204
15°C (59°F) 82 102 123 153
20°C (68°F) 63 77 94 116
25°C (77°F) 48 59 73 89
30°CV (86°F) 37 46 56 69
35°C (95°F) 30 36 45 55
40°C (104°F) 23 28 35 43
45° (113°F) 19 22 28 34
50° (122°F) 9 11 14 18

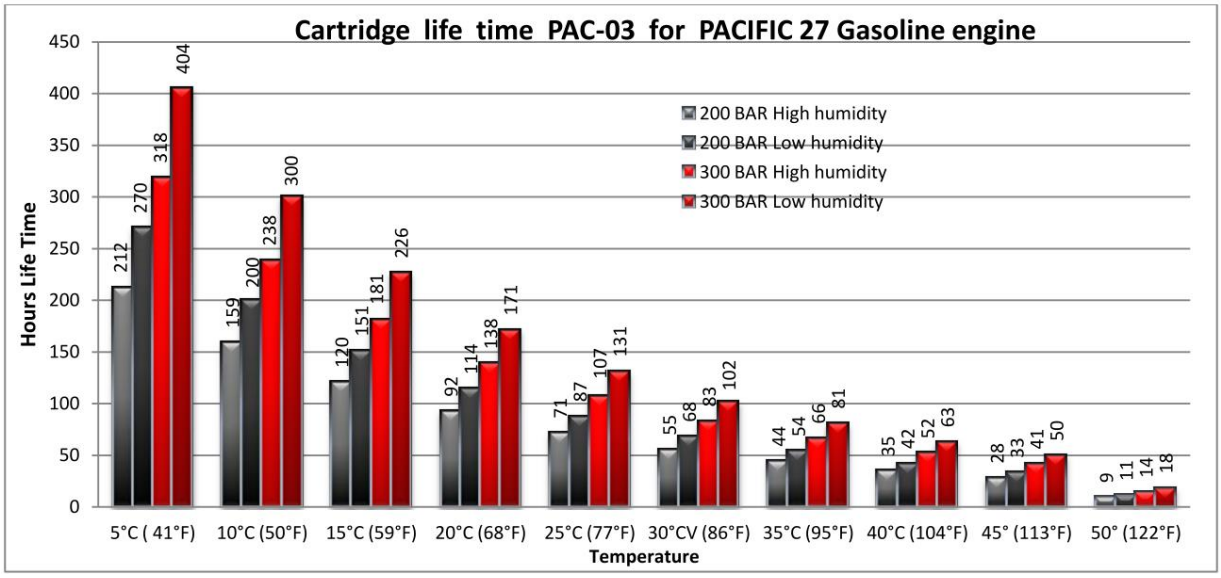
Cartridge life time PAC-03 for PACIFIC 27 Gasoline engine
Hours Life Time
Temperature
200 BAR High humidity
200 BAR Low humidity
300 BAR High humidity
300 BAR Low humidity
5°C (41°F) 212 270 318 404
10°C (50°F) 159 200 238 300
15°C (59°F) 120 151 181 226
20°C (68°F) 92 114 138 171
25°C (77°F) 71 87 107 131
30°CV (86°F) 55 68 83 102
35°C (95°F) 44 54 66 81
40°C (104°F) 35 42 52 63
45° (113°F) 28 33 41 50
50° (122°F) 9 11 14 18

7.13 PRESSURE MAINTAINING VALVE:

This type of valve has the purpose of maintaining constant pressure in the final filter. In this way, it is possible to eliminate a greater volume of water, improving the air quality and the life of the cartridge. When the compressor is switched on, the valve stays closed until the entire system reaches 150 bar, and subsequently it opens.

This valve is set by NARDI COMPRESSORI. No further calibration is required.

7.14 HEADS AND COMPRESSION VALVES:

The intake or exhaust compression valves are either reed type or plate type. Normally in the first stage there is a reed valve which opens and closes according to the flow of air that is created by the piston motion. The system operation is the same in all the various stages. The only thing that changes is the type and size of the valves and the plates.
It is important that the valve replacement and cleaning is performed by trained personnel.

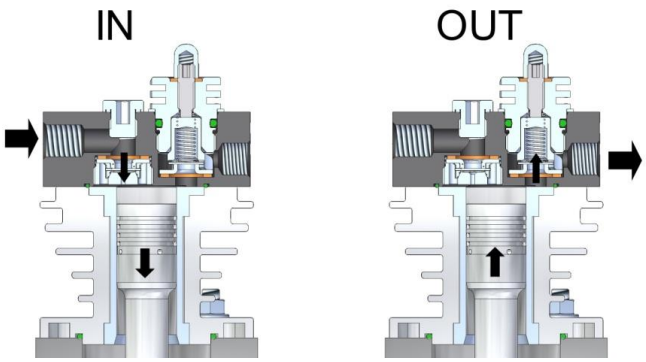

The steps for replacement of the valves are the following:

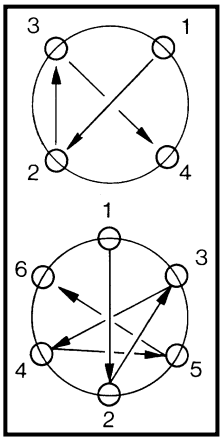

- Replace all the parts of the valve and not just some elements.
- Carefully clean the valves and remove all carbon deposits without scratching the valve.
- Be careful when reassembling the valves to follow the right sequence of the components. If the valve show scratches due to wear, it must be replaced.
- Replace the O-rings.
- Pay close attention to the image on the right, which shows the tightening sequence of the head screws.
- After performing the maintenance of the valves, switch on the compressor for 30 - 40 minutes, then switch it off and check again the closing of the screws and the dowels that compress the discharge/outlet valve of the lateral cylinders.
- The valves must be checked every 500 hours of operation.
- After 1000 hours of operation the valves and all of their components must be replaced.

7.15 VALVE REPLACEMENT – FIRST STAGE:

Look carefully at the image below for the exact positioning of the valve and make sure that the written word “TOP” or the letter “T” is facing upwards. If seals or O-rings are not in good condition, they must be replaced.

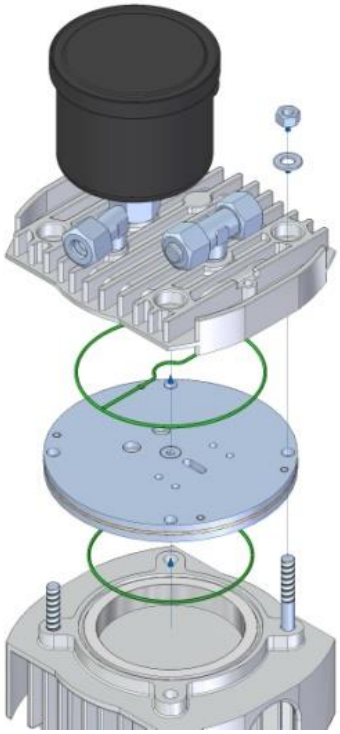

7.17 VALVE REPLACEMENT – SECOND STAGE:

The steps for replacement or cleaning of this valve are as follows:

To replace the valve, you need to:

- Disconnect the cooling hoses from the fittings.
- Remove the screws and detach completely the head from the cylinder.
- Put the head in a vice.
- Unscrew the valve bodies (one of these bodies is unscrewed with a special tool that is to be requested to Nardi Compressori).
- Clean and remove all debris.
- If the parts show signs of wear, change the worn parts.
- Mount all the components following the same sequence and changing the seals.
- On the bottom of the head there are three points that need to be engraved with a punch after the valve is set.
- Test the valve by blowing compressed air in the flow direction.
- Check the O-ring seal and replace if damaged.
- Attach the head to the cylinder.
- Secure the cooling tubes.

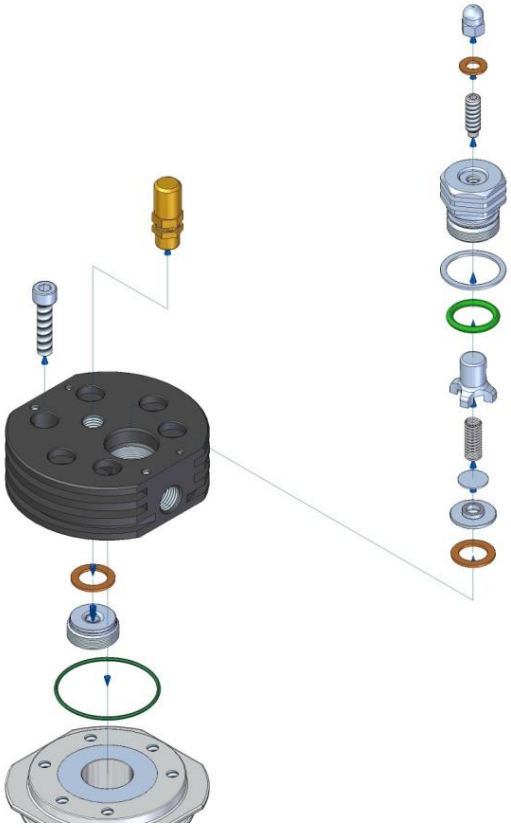

7.18 VALVE REPLACEMENT – THIRD STAGE:

The steps for replacement or cleaning of the valve are the following::

- Disconnect the cooling hoses from the fittings.
- Remove the screws and detach completely the head from the cylinder.
- Put the head in a vice.
- Unscrew the valve bodies (one of these bodies is unscrewed with a special tool that is to be requested to Nardi Compressori).
- Clean and remove all debris.
- If the parts show signs of wear, change the worn parts.
- Mount all the components following the same sequence and changing the seals.
- On the bottom of the head there are three points that need to be engraved with a punch after the valve is set.
- Test the valve by blowing compressed air in the flow direction.
- Check the O-ring seal and replace if damaged.
- Attach the head to the cylinder.
- Secure the cooling tubes.

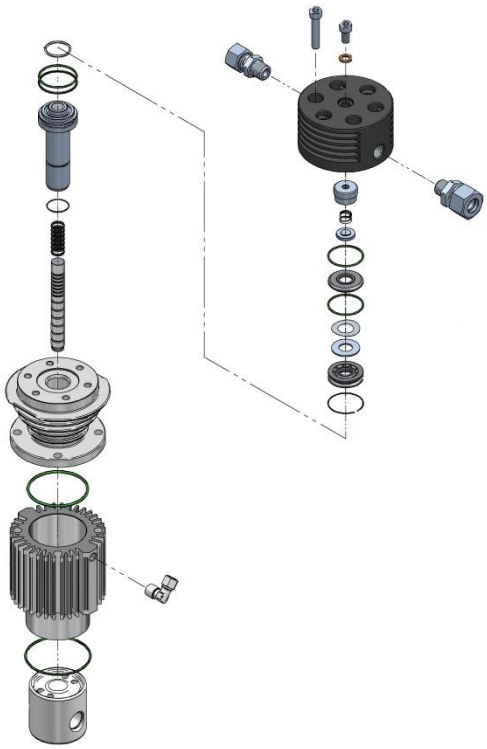

7.19 SAFETY VALVES:

Queste valvole hanno un'importanza fondamentale per la sicurezza dell'operatore e del compressore.
Sono valvole tarate ad una certa pressione, che scaricano l'aria nel caso di anomalie o malfunzionamenti.
Ogni cilindro è dotato di una valvola di sicurezza, ed ogni valvola ha impostata una taratura differente:

SAFETY VALVE	MAXIMUM PRESSURE
1st STAGE	11 BAR
2nd STAGE	80 BAR
3rd STAGE	225/330 BAR

IT IS NOT ALLOWED TO CHANGE THE MAXIMUM PRESSURE CALIBRATION OF ANY VALVE. ANY CHANGES CAN CAUSE SERIOUS DAMAGE AND CONSEQUENT VOID OF THE WARRANTY!!

7.20 FILLING VALVES AND FILLING HOSES:

It is very important to keep the filling hoses in optimal condition and to replace them periodically, as required.
We recommend replacing the hoses every two years, or whenever abrasion/scratches are visible on the hoses or whenever there is rust on the fittings.
You must visually inspect the filling hoses before filling cylinders.
Keep the hoses sheltered from direct sunlight in order to avoid premature aging of the hoses and keep them at a temperature between 80/-40 °C.
The minimum radius of curvature must not be less than 400mm.
Do not work on the compressor if it has just been turned off. Wait until the system cools down completely and check carefully that the fittings are tightened properly when replacing the hoses.

The filling valve which is used to fill cylinders with compressed breathing air allows opening and closing the passage of air. This way the pressure in the whole system remains constant, including the hoses, so as to eliminate any infiltration of moisture in the hoses, further optimizing the quality of the breathing air.
Moreover, once the filling operation is completed and you proceed to close the filling valve, the air under pressure in the filling valve is automatically blown-off with no need for additional valves.
When you close the filling valve, fully tighten it until all the air is released.

7.21 AUTOMATIC CONDENSATE DRAIN:

The drain of the condensate and oil of the two intermediate separators and of the residual moisture of the final carbon filter takes place simultaneously and in an automatic manner, through a single exhaust system, which considerably lowers the costs and greatly simplifies the operation. This allows the operators freedom to dedicate themselves to other activities while filling cylinders.
Every 6 minutes (this time interval is the default factory setting but it can be reset by the operators at a more suitable time interval of their choice at any time). The solenoid valve opens the flow of air **for 5 seconds** which serves to trigger the pistons connected to the intermediate separators and the final filter. The solenoid valve is equipped with a display directly located on it.

The default factory settings are:

DRAIN CLOSED = 6 MINUTES (OFF)
DRAIN OPEN = 5 SECONDS (ON)

These settings can be changed through the electronic control panel.

7.22 AUTOMATIC STOP SYSTEM:

The compressor is equipped with an automatic stop system, which stops the compressor when the desired pressure is reached. This pressure switch is calibrated by NARDI COMPRESSORI at the time of testing of the finished compressor. This way, the operators do not need to stand next to the compressor all the time while the cylinders get filled, but may dedicate themselves to other activities. Once the cylinders are filled, the machine stops automatically, keeping the system in pressure, and the operator can proceed to the closing of the filling valve at any time. The full cylinder can then be replaced with an empty one (if additional cylinders need to be filled) and restart the compressor by pressing the START button on the electronic control panel. In case of danger or faults, press the red EMERGENCY button, which is located on the electronic control panel and the machine stops immediately. To restart the machine after an emergency, release the red button (knob) turning it counter-clockwise and press START.

1. Main switch and door lock.
2. Emergency knob and stop button.
3. Start button (START).
4. General alarms – red LED (GENERAL ALARMS).
5. Compressor on – green LED (COMPRESSOR ON).
6. White LED indicates electronic panel is on.
7. Condensate drain button (PURGE)
8. Liquid crystal display.
9. Page button (PAGE)
10. Up arrow button (▲).
11. Down arrow button (▼).
12. Reset button (RESET).

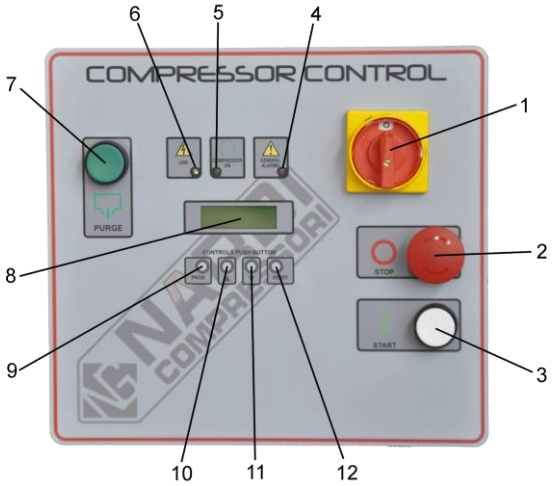

7.23 USE OF THE ELECTRONIC CONTROL PANEL:

CAUTION: The electronic control panel is an advanced component that allows you to monitor the compressor and at the same time change its parameters of use.

The electronic panel is set by Nardi Compressori at the time of production based on the pressure and with the standard parameters.

The electronic control panel is composed of the following buttons:

LINE SWITCH: This switch is used to provide power to the electronic panel and all electrical parts. When it is set to "0" no component has voltage but, when it is necessary to operate within the compressor you should still unplug the power from the electrical outlet. When it is switched to the position "I" is blocks the opening of the electronic panel and the compressor and all electrical components are powered.
STOP BUTTON: Used to turn off the compressor. Once you push on it to turn off the compressor it needs to be reset to its normal position by turning the nob clockwise.
START BUTTON: This button turns on the compressor.
PURGE BUTTON: This button is pressed during operation of the compressor and it is used to drain the condensate which is collected in the intermediate separators and in the filter.
PAGE - ▲ - ▼ - RESET BUTTONS: These buttons are used to scroll the menu of the electronic panel and to modify the operating parameters of the compressor.
LED LIGHT LINE: When on, this white LED light indicates that there is electrical current in the electronic control panel and its components.
LED LIGHT COMPRESSOR ON: This green LED light indicates that the compressor is running.
LED LIGHT GENERAL ALARMS: This red LED flashing light indicates a problem or an alarm.
Setting and changing of the parameters:

When the electronic control panel is turned on, the display shows a screen that displays "NARDI AIR COMPRESSOR" with the serial number of the electronic control panel. It will remain on the display for a few seconds before it moves on to the next screen.

```
NARDI
AIR COMPRESSOR
900385
```

The next screen shows by itself and it indicates the pressure of the system "PRESSURE" in BAR or PSI, hours of operation "WORK TIME" in hours or "h" and the stop pressure of the compressor which in the picture on the left was set at 100 bar (this value can be modified).

```
PRESSURE      0BAR
WORK TIME       1h
STOP PRE.    225bar
```

To move to the next screen you must press the PAGE button.

In this screen, the cursor "_" blinks next to the word "ON". Pressing the arrow buttons ▲ (up) or ▼ (down), you can modify the time that the condensate drain remains open, in seconds "sec". Pressing the "PAGE" button the blinking cursor "_" will move next to the word "OFF". Pressing the arrow buttons ▲ (up) or ▼ (down), you can change the time interval between cycles of condensate drain, in minutes "min". The standard parameters are: "ON" open 5 seconds - "OFF" closed 15 minutes.

```
CONDENSATE BLOW
WATER  ON  _ 3 sec
       OFF   15 min
```

To move to the next screen you must press the PAGE button again.

This screen shows the number of times the condensate has been drained under the message "TIME NUMBER CONDENSATE BLOW WATER ". This parameter indicates the number of cycles of pressurization and depressurization suffered by separators, filter, and various components of the compressor. This information is useful for replacement of components under pressure based on usage.

```
TIME NUMBER
CONDENSATE BLOW
WATER          5
```

To move to the next screen you must press the PAGE button again.

In this screen you can change the mode in which you use the compressor. The default mode set by Nardi Compressori is manual "MANUAL", this means that once the compressor reaches the maximum pressure it turns off automatically. In order to restart the compressor, you need to manually press the "START" button.

```
MODE
MANUAL
```

To change the mode from "MANUAL" to "AUTOMATIC" you need to press the arrow buttons ▲ (up) ▼ (down).
In "AUTOMATIC" mode the compressor turns off automatically when it reaches the maximum pressure but it restarts automatically at the minimum pressure level set up. This mode is normally used when the compressor is connected to a storage system of cylinders or canisters. When the minimum pressure is reached the compressor restarts keeping all the stored air under pressure.

```
MODE
AUTOMATIC
```

To move to the next screen you must press the PAGE button again.

In this screen you can change the maximum pressure at which the compressor will automatically stop "COMPRESSOR MAXIMUN PRESSURE".
Pressing the arrow buttons ▲ (up) o ▼ (down) you can change the value entered. The highest value in the scale is calculated based on the characteristics of the compressor. This is set by NARDI COMPRESSORI at 225 BAR or 330 BAR according to the maximum pressure allowed by the compressor.

```
COMPRESSOR
MAXIMUM PRESSURE
225 bar
```

To move to the next screen you must press the PAGE button again.

COMPRESSOR
MINIMUM PRESSURE
50 bar

In this screen you can change the minimum pressure to restart the compressor in "AUTOMATIC" mode "COMPRESSOR MINIMUN PRESSURE". Pressing the arrow buttons ▲ (up) or ▼ (down) you can modify the value.
The standard parameter is 50 BAR. This value of minimum pressure can be increased but it cannot be larger than 30 BAR from the value of maximum pressure (the difference between maximum pressure and minimum pressure cannot exceed 30 BAR).

To move to the next screen you must press the PAGE button again.

TIME TO
SERVICE
500 h

This screen displays the time in hours "h" that remain until the next maintenance service by a skilled technician.
This value is important for a proper maintenance of the compressor. The electronic board will send a signal at 200 and 100 hours of service, to remind you to contact your dealer to arrange an appointment for routine maintenance. These two alarms will display the message "SERVICE TIME ALERT", the red LED light in "GENERAL ALARMS" will turn on and it will send an audible signal. Pressing the "RESET" button, everything will go back to normal until the third alarm Is activated with the message "SERVICE TIME / NEED MAINTENANCE", the red LED light in "GENERAL ALARMS" will turn on and it will send an audible signal. Pressing the "RESET" button the compressor will still work but the message "SERVICE TIME / NEED MAINTENANCE" will continue showing until a technician provides service to the machine and resets the alarm.

To move to the next screen you must press the PAGE button again.

LINE VOLTAGE 396
MOTOR CURRENT
0.0A

This screen displays the utility voltage in volts LINE VOLTAGE" and the current drawn by the motor of the compressor in Ampers "MOTOR CURRENT". This information helps to monitor the proper functioning of the motor according to the voltage. In case the current drawn by the motor is abnormal, this will trigger an alarm and the display will show the message "OVER CURRENT MOTOR", the red LED light in "GENERAL ALARMS" will turn on and it will send an audible signal. The compressor will turn off automatically. Pressing the "RESET" button everything will go back to normal. We strongly advise you to pay attention to this alarm because the motor has drawn more current than it should. If this happens more than once, get in contact with technical assistance.

To move to the next screen you must press the PAGE button again.

TEMPERATURE
COMPRESSOR
29°C

This screen displays the temperature of the head of the last stage of the compressor. A temperature sensor monitors the heating of this component in such a way as to stop the compressor in case of high temperatures due to a lack of ventilation and to a fault. This will trigger an alarm, the display will show the message "OVER TEMPARATURE COMPRESSOR", the red LED light in "GENERAL ALARMS" will turn on and it will send an audible signal. The compressor will turn off automatically. Pressing the "RESET" button everything will go back to normal but we strong advise you to pay attention to this alarm because the compressor is working at high temperature. If this happens more than once, get in contact with technical assistance.

7.24 VISIBLE ALARMS AND ACTIONS:

The electronic panel may trigger several alarms, normally when this happens it means that one or more of the values of the parameters set by NARDI COMPRESSORI (maximum and minimum value tresholds) has been exceeded. Alternatively, it also occurs due to a signal sent from one of the various sensors placed in key locations in the compressor. For each alarm, the display will show the message that indicates the problem, the red LED light in "GENERAL ALARMS" will turn on, it will send an audible signal and the compressor will turn off automatically.

Due to the high precision of the electronic panel, an alarm can easily be triggered due to a power surge or other causes not related to a malfunction of the compressor and/or its components. We advise you to press the "RESET" button and check to make sure the same alarm occurs again for a second time. If the same alarm occurs again, you should contact your local dealer and report the problem.

The alarms that can be triggered by the electronic control panel are the following:

SEQUENCE OR PHASE FAILURE: This alarm indicates that the motor was connected wrongly (running backwards).

OVER CURRENT MOTOR: This alarm indicates that the electric current drawn by the motor is abnormally high.

UNDER CURRENT MOTOR: This alarm indicates that the motor is not working due to low current (motor will not start).

LINE OVER VOLTAGE: This alarm indicates that the electric voltage of the line is too high (+10%).

LINE UNDER VOLTAGE: This alarm indicates that the electric voltage of the line is too low (-15%).

SERVICE TIME ALERT: This alarm indicates that in 200 or 100 hours a maintenance service is required.

SERVICE TIME / NEED MAINTENANCE: This alarm indicates that maintenance service is due.

OVER TEMPERATURE COMPRESSOR: This alarm indicates that the compressor has reached a high temperature.

TEMPERATURE SENSOR BROKEN ON NOT CONNECTED: This alarm indicates that the temperature sensor is damaged or not connected.

PRESSURE SENSOR BROKEN ON NOT CONNECTED: This alarm indicates that the pressure sensor is damaged or not connected.

OIL LEVEL: This alarm indicates that the level of oil is low.

7.25 SPECIAL WASTE DISPOSAL:

Disposal of the compressor or components must be done in accordance with the rules in force in the country of installation.

7.26 TROUBLE-SHOOTING:

PROBLEM	CAUSE	REMEDY
The compressor does not start	• Electric current missing • Bad fuse • Electric current too low	• Check electric line • Replace bad fuse • Check electric line
Motor thermal protection kicks in	• Current consumption too high • Thermal protection setting too low	• Check the pumping unit • Correct the thermal protection setting
The electric motor does not work	• Problems with the electric circuits	• Invert the phase leads of the motor • Check the fuses • Make sure there is enough electric current • Make sure the electric current reaches the motor
The rotation speed and the air delivery decrease	• The electric current that arrives at the motor is insufficient • The belt slips	• Make sure there is enough electric current • Check the electric motor • Check the tension of the belt • Replace the belt
The air delivery decreases (without lowering the rotation speed)	• Loose fittings • Worn gaskets • Intake filter clogged • Worn piston rings • Intake extension clogged • Valves not working	• Tighten fittings • Replace the gaskets • Replace or clean filter • Replace piston rings • Check intake extension tube • Replace or clean valves
Compressor does not reach maximum presure	•Worn piston rings •Excessively worn pistons •Premature opening of safety valve	• Replace worn piston rings • Replace worn pistons •Clean safety valve •Check and correct calibration of safety valve •Replace safety valve
The safety valve of an intermediate stage has a leak	• Stage pressure too high • Premature opening of safety valve	• Pressure problems in next stage • Clean safety valve • Check and correct calibration of safety valve • Replace safety valve
Compressor overheating	•Wrong sense of rotation of motor •Poor air intake •Valves not closed properly	•Invert the phase of the electric motor •Increase air intake in the room •Check, clean and replace valve •Ambient temperature too high (+45 °C Max)
Breathing air smells of oil	• Final filter cartridge exhausted	•Replace final filter cartridge
Excessive oil consumption	•Worn piston rings •Excessively worn piston •Intake filter clogged	•Replace worn piston rings •Replace worn piston •Clean intake filter •Replace intake filter
The compressor does not switched off automatically	•Solenoid valve calibration too high •Safety valve of last stage not working	•Correct the calibration of the solenoid valve •Clean safety valve •Calibration safety valve •Replace safety valve

NARDI COMPRESSORI	**SPARE PARTS** **PACIFIC 27** ***Driving Gear***	PA001-045 Rev.00 Date 12/02/2011

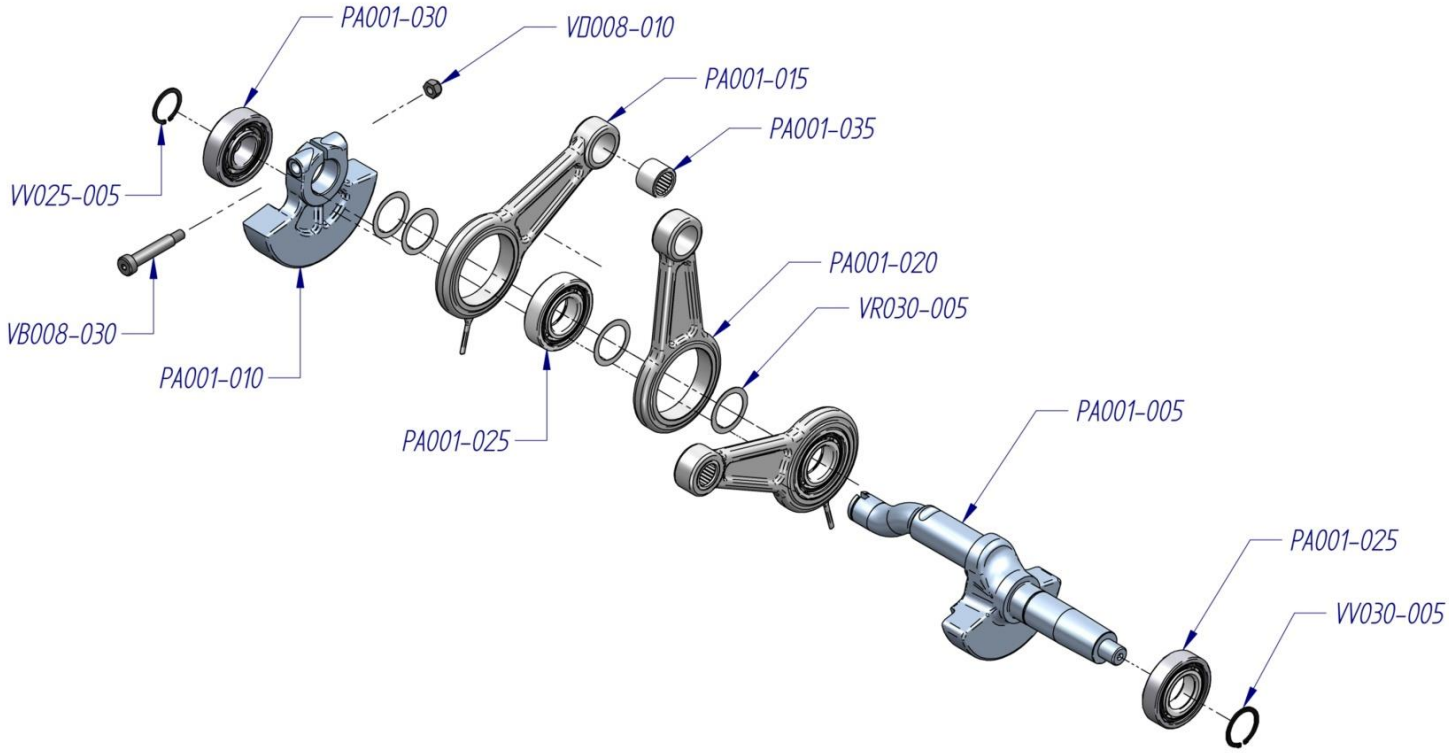

CODE	DESCRIPTION	€	CODE	DESCRIPTION	€	CODE	DESCRIPTION	€
PA001-005	Albero motore	245,00	PA001-025	Cuscinetto	65,00	VD008-010	Dado	1,25
PA001-010	Contrappeso albero	40,00	PA001-030	Cuscinetto	55,00	VR030-005	Rondella	1,25
PA001-015	Biella con sbatti olio	16,00	PA001-035	Cuscinetto	10,50	VV025-005	Anello di sicurezza	1,25
PA001-020	Biella	16,00	VB008-030	Vite	10,00	VV030-005	Anello di sicurezza	1,25

NARDI COMPRESSORI	**SPARE PARTS** **PACIFIC 27** ***Driving Gear***	PA001-051 Rev.00 Date 12/02/2011

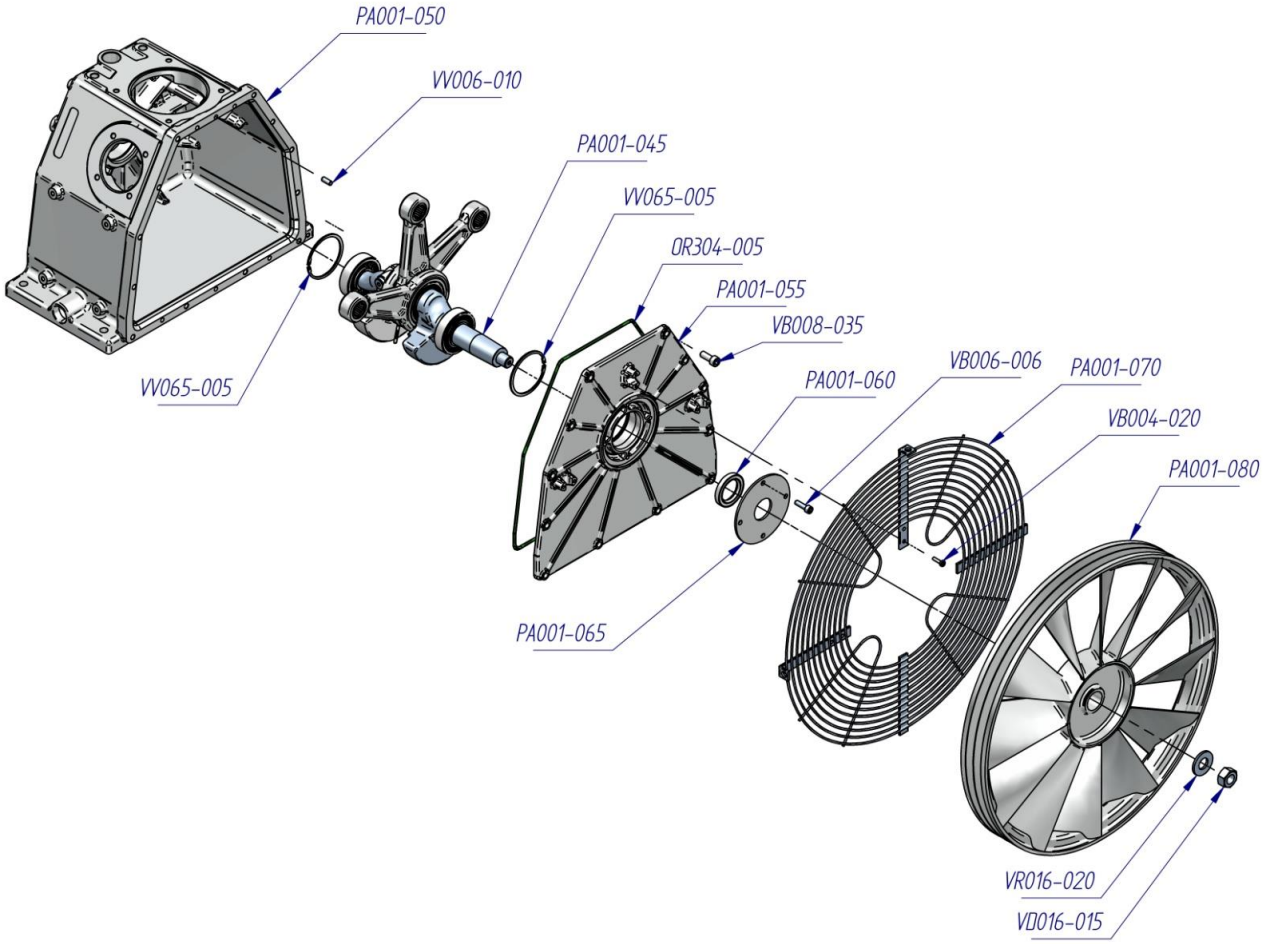

CODE	DESCRIPTION		CODE	DESCRIPTION		CODE	DESCRIPTION	
OR304-005	*O-ring*		PA001-065	*Oil seal flange*		VB008-035	*Screw*	
PA001-045	*Shaft complete of connecting rod*		PA001-070	*Metal protection*		VD016-015	*Nut*	
PA001-050	*Compressor crankcase*		PA001-080	*Pulley-fan compressor*		VR016-020	*Washer*	
PA001-055	*Closing crankcase flange*		VB004-020	*Screw*		VV006-010	*Pin*	
PA001-060	*Oil seal*		VB006-006	*Screw*		VV065-005	*Safety ring*	

NARDI COMPRESSORI	**SPARE PARTS** **PACIFIC 27** ***Crankcase with Accessories***	PA001-060 Rev.01 Date 12/02/2011

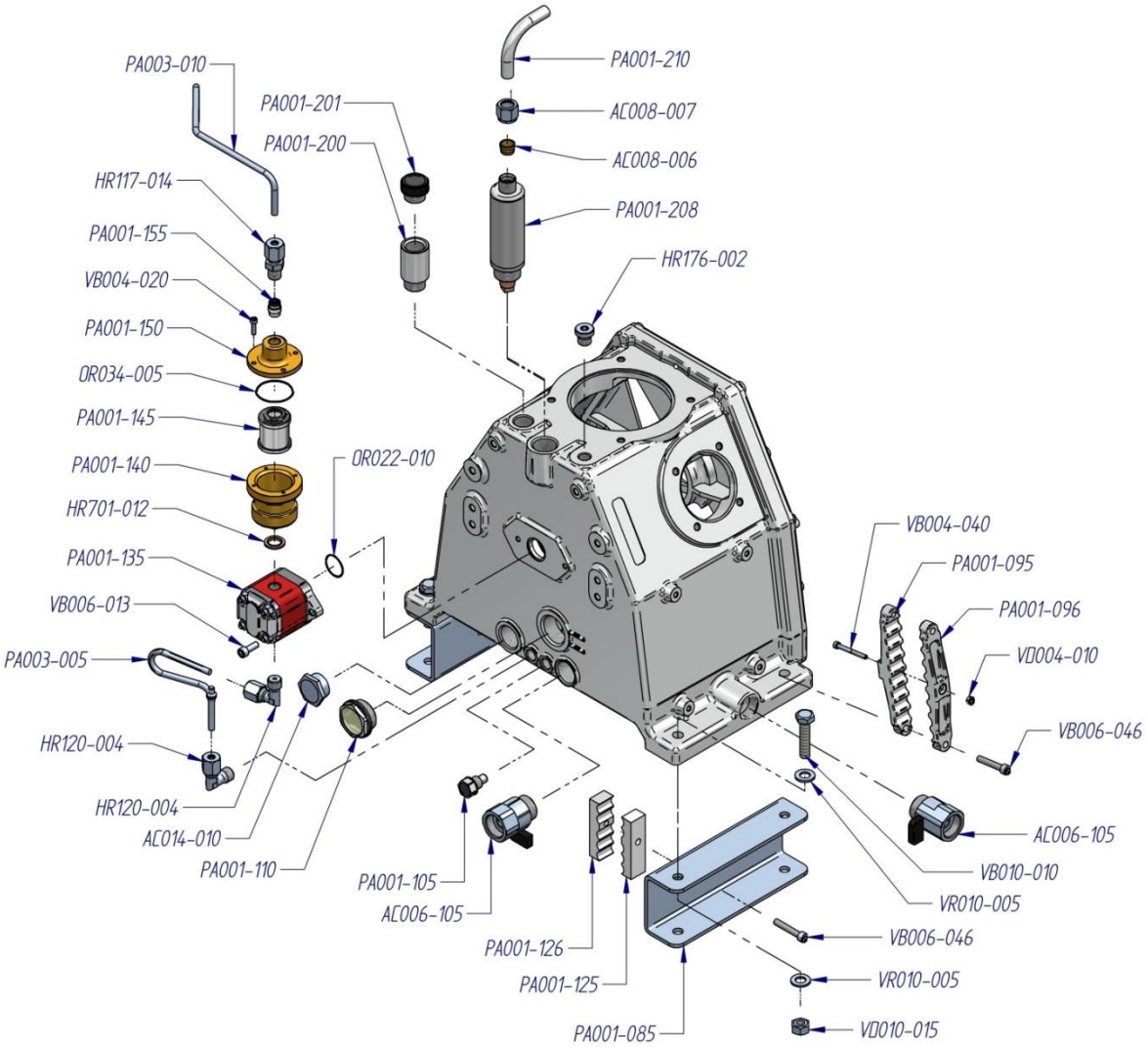

CODE	DESCRIPTION		CODE	DESCRIPTION		CODE	DESCRIPTION	
AC006-105	Ball valve		PA001-105	Magnetic plug		PA003-005	Tube oil pump	
AC008-006	Ogive for tube 12mm		PA001-110	Visual oil level plug		PA003-010	Tube oil pump	
AC008-007	Nut for tube 12 mm		PA001-125	Support cooling tube		VB004-020	Screw	
AC014-010	Closure plug		PA001-126	Support cooling tube		VB004-040	Screw	
HR117-014	Pipe fitting G1/4" for tube 6mm		PA001-135	Oil pump		VB006-013	Screw	
HR120-004	Pipe fitting "L" G1/4" for tube 6mm		PA001-140	Oil filter holder chamber		VB006-046	Screw	
HR176-002	Closure plug G1/4"		PA001-145	Oil filter		VB010-010	Screw	
HR701-013	Washer gasket		PA001-150	Closure oil filter chamber		VD004-010	Nut	
OR022-010	O-ring		PA001-155	No-return valve oil		VD010-015	Nut	
OR034-005	O-ring		PA001-200	Oil fitting pipe		VR010-005	Washer	
PA001-085	Support compressor		PA001-201	Plug				
PA001-095	Support cooling tube		PA001-208	Oil separator				
PA001-096	Support cooling tube		PA001-205	Tube				

NARDI COMPRESSORI	**SPARE PARTS** **PACIFIC 27** ***First Stage***	PA002-089 Rev.01 Date 12/02/2011

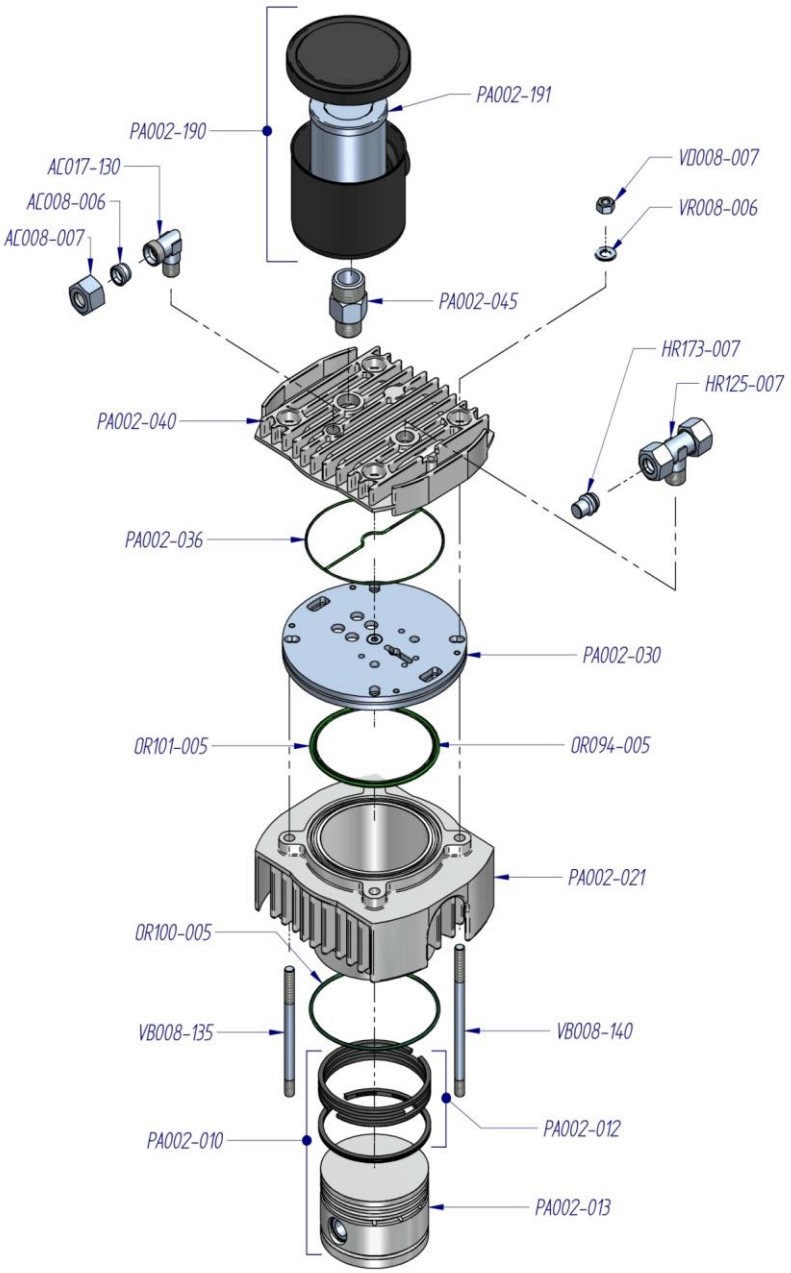

CODE	DESCRIPTION		CODE	DESCRIPTION		CODE	DESCRIPTION	
AC008-006	*Ogive*		**PA002-010**	*Complete piston*		**PA002-190**	*Complete intake filter*	
AC008-007	*Nut*		**PA002-012**	*Set Piston rings*		**PA002-191**	*Intake filter cartridge*	
AC017-130	*Pipe fitting "L"*		**PA002-013**	*Piston*		**VB008-135**	*Screw*	
HR125-007	*Pipe fitting "T" 3/8"G for tube 12 mm*		**PA002-021**	*Cylinder 1st stage*		**VB008-140**	*Screw*	
HR173-007	*Closure connection tube 12 mm*		**PA002-030**	*Plate valve1st stage*		**VD008-007**	*Nut*	
OR094-005	*O-ring*		**PA002-036**	*O-ring*		**VR008-006**	*Washer*	
OR100-005	*O-ring*		**PA002-040**	*Head 1st stage*				
OR101-005	*O-ring*		**PA002-045**	*Connection*				

NARDI COMPRESSORI	**SPARE PARTS** **PACIFIC 27** ***Second Stage***	PA002-036 Rev.01 Data 12/02/2011

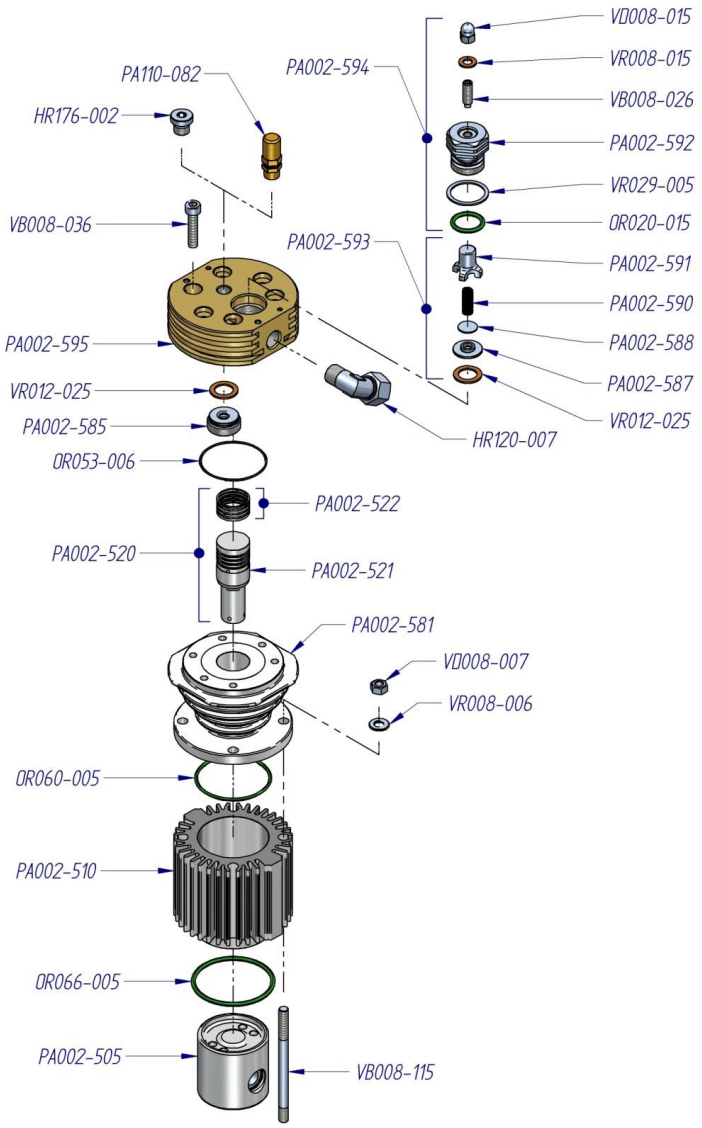

CODE	DESCRIPTION		CODE	DESCRIPTION		CODE	DESCRIPTION	
HR120-007	Raccordo "L" 3/8"G per tubo 12 mm		PA002-581	Cilindro		VB008-026	Vite	
HR176-002	Tappo 1/4''		PA002-585	Valvola aspirazione		VB008-036	Vite	
OR020-015	O-ring		PA002-587	Base valvola		VB008-115	Vite	
OR053-006	O-ring		PA002-588	Piastra valvolare		VD008-007	Dado	
OR060-005	O-ring		PA002-590	Molla valvola di scarico		VD008-015	Dado	
OR066-005	O-ring		PA002-591	Inserto valvola		VR008-006	Rondella	
PA002-505	Guida pistone		PA002-592	Corpo valvola		VR008-015	Rondella	
PA002-510	Cilindro		PA002-593	Inserto valvola di scarico		VR012-025	Rondella	
PA002-520	Pistone completo con segmenti		PA002-594	Corpo valvola completo		VR029-005	Rondella	
PA002-521	Pistone		PA002-595	Valvola testa				
PA002-522	Set segmenti pistone		PA110-082	Valvola di sicurezza				

NARDI COMPRESSORI	**SPARE PARTS** **PACIFIC 27** ***Third Stage***	PA002-012 Rev.02 Data 03/06/2014

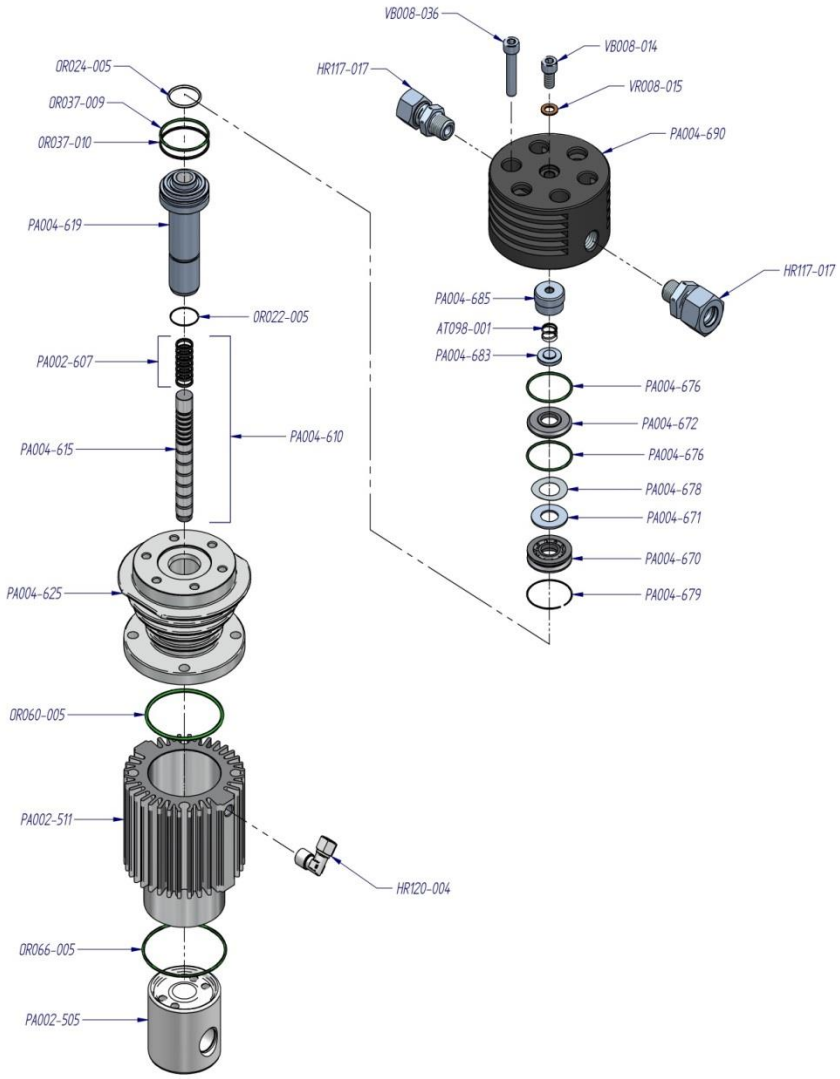

CODE	DESCRIPTION		CODE	DESCRIPTION		CODE	DESCRIPTION	
AT098-001	*Spring*		PA004-610	*Complete piston with rings*		PA004-683	*Valve top*	
HR117-017	*Pipe fitting direct*		PA004-615	*Piston*		PA004-685	*Suction valve*	
HR120-004	*Pipe fitting "L"*		PA002-607	*Set piston rings*		PA004-690	*Valve head*	
OR037-009	*O-ring*		PA004-619	*Cylinder's pipe*		VB008-014	*Screw*	
OR037-010	*O-ring*		PA004-625	*Cylinder*		VB008-036	*Screw*	
OR022-005	*O-ring*		PA004-670	*Coupling pressure valve*		VR008-015	*Washer*	
OR024-005	*O-ring*		PA004-671	*Pressure valve*				
OR060-005	*O-ring*		PA004-672	*Top valve*				
OR066-005	*O-ring*		PA004-676	*Special O-Ring*				
PA002-505	*Piston guide*		PA004-678	*Special spring*				
PA002-511	*Cylinder*		PA004-679	*Setger valve*				

NARDI COMPRESSORI	**SPARE PARTS** **PACIFIC 27** ***Filter separator***	PA002-205 Rev.00 Date 12/02/2011

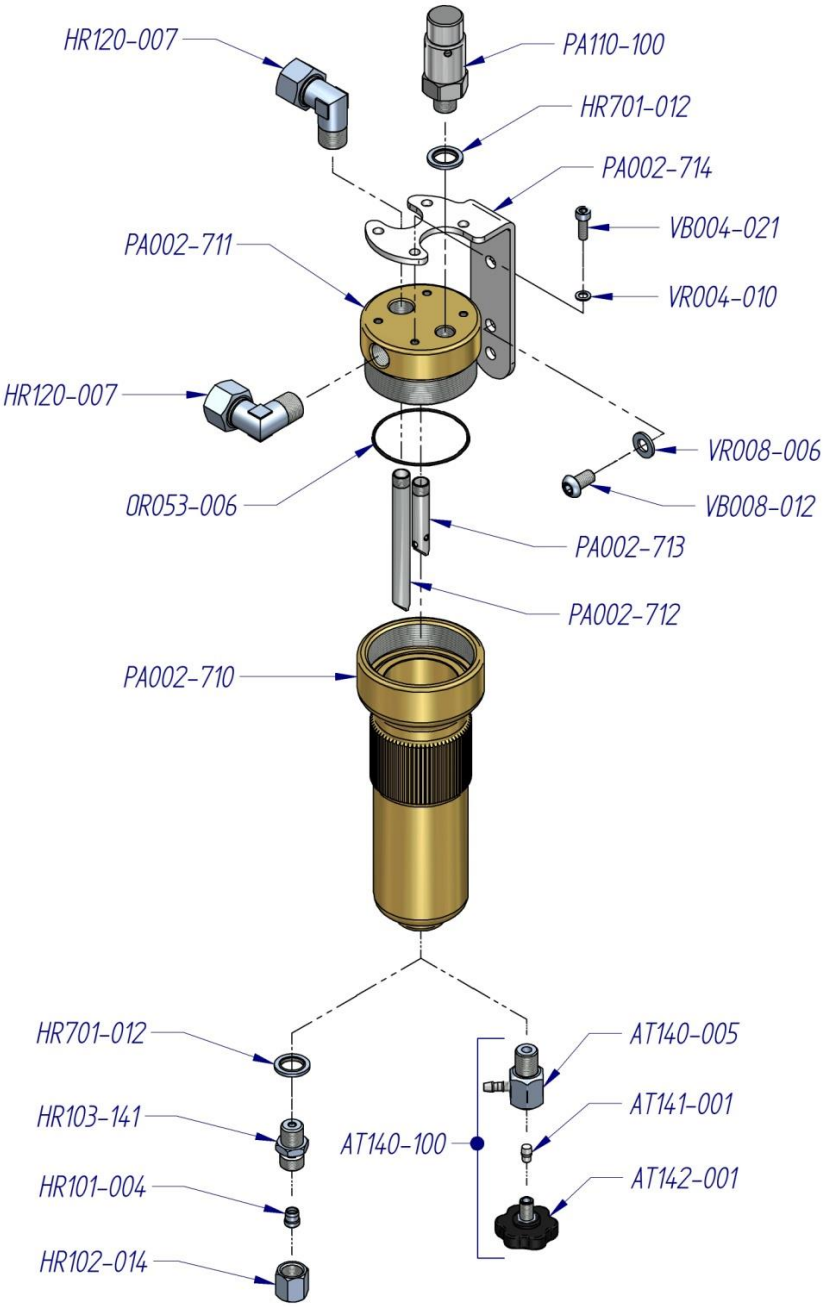

CODE	DESCRIPTION		CODE	DESCRIPTION		CODE	DESCRIPTION	
AT140-005	*Body drain valve complete*		**HR120-007**	*Pipe fitting "L" 3/8"G for tube 12 mm*		**PA002-714**	*Support filter separator*	
AT140-100	*Condensate drain valve complete*		**HR701-012**	*Washer gasket*		**PA110-100**	*Safety valve*	
AT141-001	*Rilsan nut*		**OR053-006**	*O-ring*		**VB004-021**	*Screw*	
AT142-001	*Black screw of discharge*		**PA002-710**	*Body filter separator*		**VB008-012**	*Screw*	
HR101-004	*Ogive*		**PA002-711**	*Head filter separator*		**VR004-010**	*Washer*	
HR102-014	*Nut fitting pipe*		**PA002-712**	*Tube separator*		**VR008-006**	*Washer*	
HR103-141	*Body pipe fitting ¼'' for tube 6 mm INOX*		**PA002-713**	*Tube separator*				

NARDI COMPRESSORI	**SPARE PARTS** **PACIFIC 27** ***Filter separator***	PA002-210 Rev.00 Date 12/02/2011

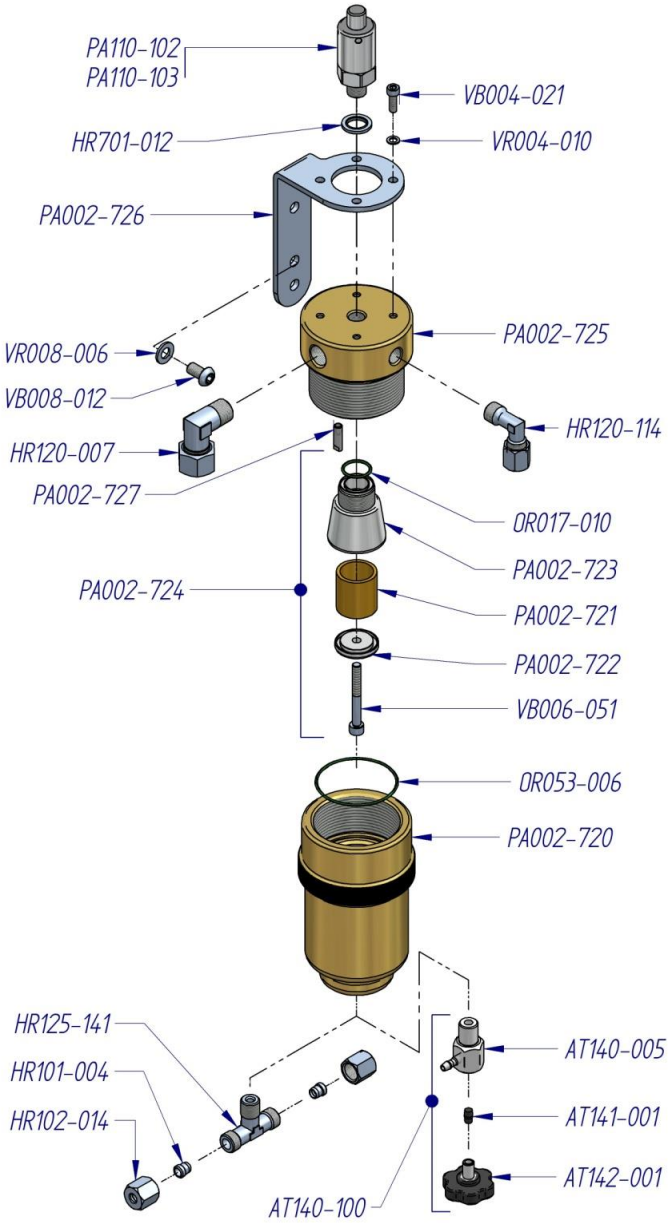

CODE	DESCRIPTION		CODE	DESCRIPTION		CODE	DESCRIPTION	
AT140-005	Body drain valve complete		OR017-010	O-ring		PA110-102	Safety valve PN 200 bar	
AT140-100	Condensate drain valve complete		OR053-006	O-ring		PA110-103	Safety valve PN 300 bar	
AT141-001	Rilsan nut		PA002-720	Body filter separator		VB004-021	Screw	
AT142-001	Black screw of discharge		PA002-721	Sintered filter		VB006-051	Screw	
HR101-004	Ogive		PA002-722	Flange		VB008-012	Screw	
HR102-014	Nut filling pipe		PA002-723	Flange		VR004-010	Washer	
HR120-007	Pipe fitting "L" 3/8"G for tube 12 mm		PA002-724	Complete filter separator cartridge		VR008-006	Washer	
HR120-114	Pipe fitting "L" 1/4"G for tube 6 mm		PA002-725	Head filter separator				
HR125-141	Body pipe fitting "T" 1/4"G for tube 6		PA002-726	Support filter separator				
HR701-012	Washer gasket		PA002-727	Tube separator				

NARDI COMPRESSORI	**SPARE PARTS** **PACIFIC 27** ***Cooling System***	PA003-028 Rev.00 Date 12/02/2011

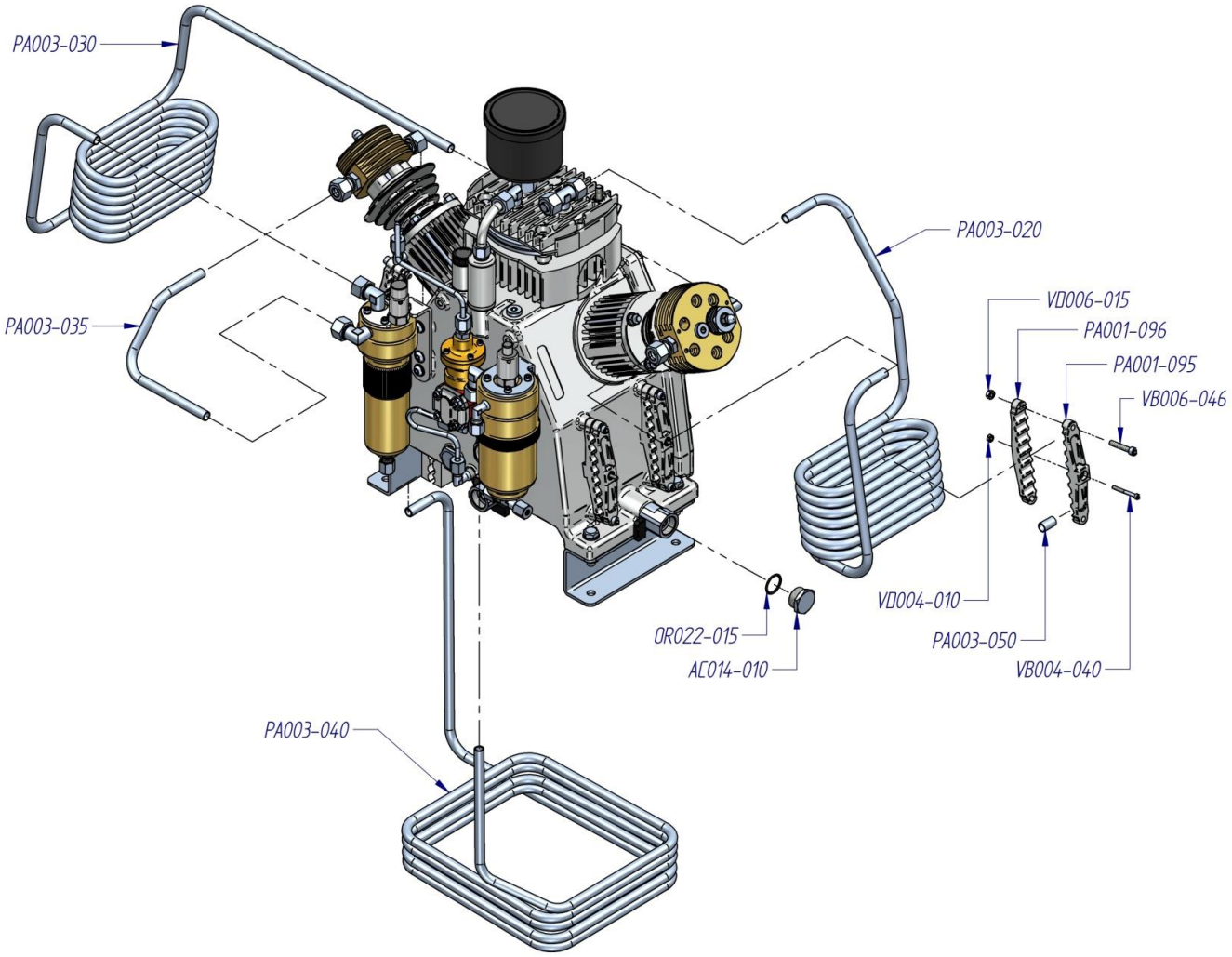

CODE	DESCRIPTION		CODE	DESCRIPTION		CODE	DESCRIPTION	
AC014-010	*Nut*		PA003-030	*Inter cooler*		VB006-046	*Screw*	
OR022-015	*O-ring*		PA003-035	*Connecting tube*		VD004-010	*Nut*	
PA001-095	*Fixing for cooler*		PA003-040	*Inter cooler*		VD006-015	*Nut*	
PA001-096	*Fixing for cooler*		PA003-050	*Tube*				
PA003-020	*Inter cooler*		VB004-040	*Screw*				

NARDI COMPRESSORI	**SPARE PARTS** **PACIFIC FILTER 1** ***Filter Housing PAC FILTER 1***	PA100-182 Rev.01 Date 02/05/2013

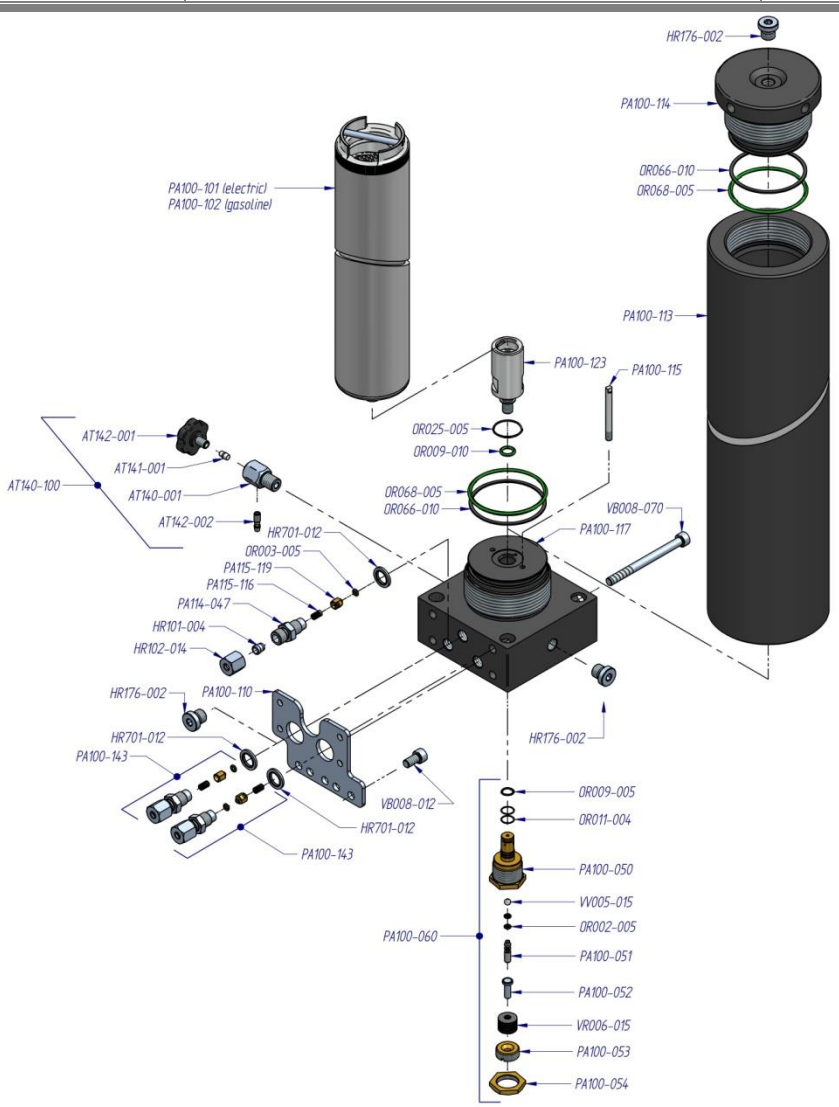

CODE	DESCRIPTION		CODE	DESCRIPTION		CODE	DESCRIPTION	
AT140-001	Drain valve housing		OR011-004	O-ring		PA100-113	Filter housing	
AT140-100	Condensate drain valve complete		OR025-005	O-ring		PA100-114	Head filter housing	
AT141-001	Rilsan nut		OR066-010	O-ring		PA100-115	Nozzle	
AT142-001	Black screw of discharge		OR068-005	O-ring		PA100-117	Base filter	
AT142-002	Drain out		PA100-050	Maintaining valve insert		PA100-123	Extension filter	
HR101-004	Ogive		PA100-051	Piston maintaining valve		PA100-149	No return valve filter	
HR102-014	Nut fitting pipe		PA100-052	Spring guide		PA114-047	Connection INOX	
HR176-002	Closure plug 1/4''		PA100-053	Closure plug		PA115-116	Spring no return valve	
HR701-012	Washer		PA100-054	Nut		PA115-119	Piston no return valve	
OR002-005	O-ring		PA100-060	Maintaining valve complete		VB008-012	Screw	
OR003-005	O-ring		PA100-101	Filter cartridge - electric		VB008-070	Screw	
OR009-005	O-ring		PA100-102	Filter cartridge - gasoline		VR006-015	Washer spring	
OR009-010	O-ring		PA100-110	Support filter		VV005-015	Sphere	

NARDI COMPRESSORI	**SPARE PARTS** **PACIFIC FILTER 2** ***Filter Housing PAC FILTER 2***	PA100-282 Rev.01 Date 02/05/2013

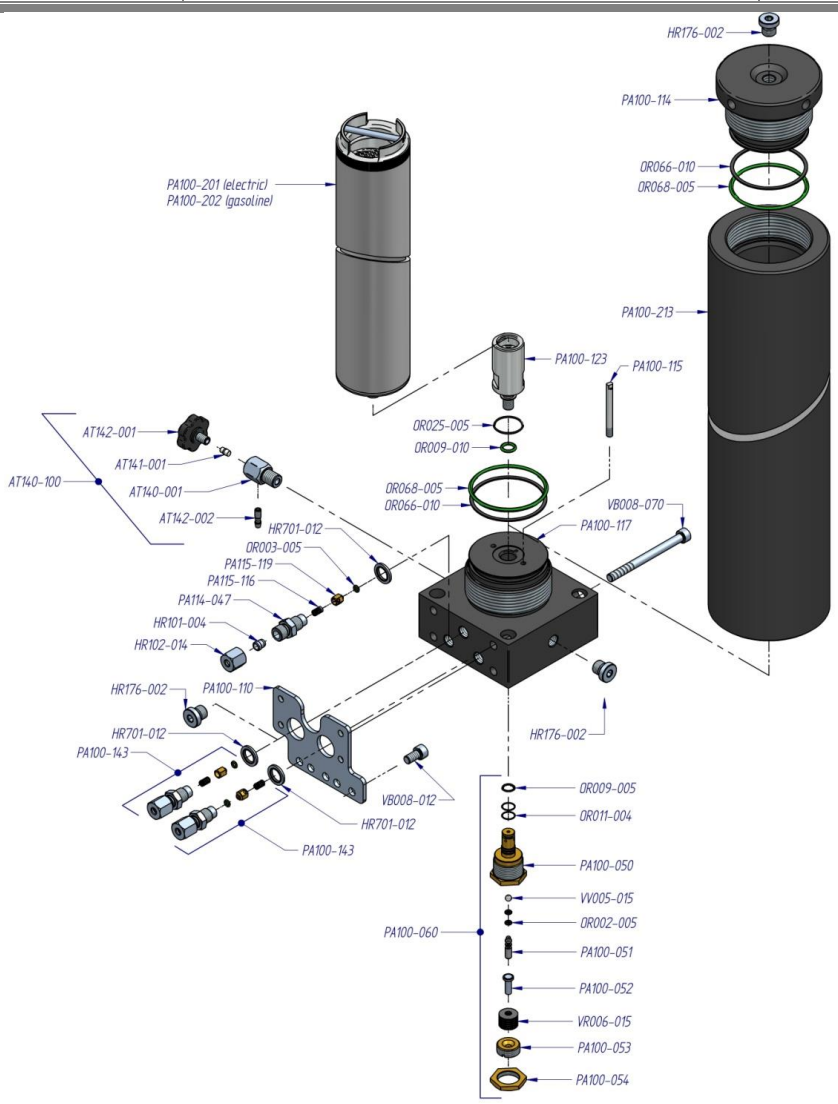

CODE	DESCRIPTION		CODE	DESCRIPTION		CODE	DESCRIPTION	
AT140-001	Drain valve housing		OR011-004	O-ring		PA100-213	Filter housing	
AT140-100	Condensate drain valve complete		OR025-005	O-ring		PA100-114	Head filter housing	
AT141-001	Rilsan nut		OR066-010	O-ring		PA100-115	Nozzle	
AT142-001	Black screw of discharge		OR068-005	O-ring		PA100-117	Base filter	
AT142-002	Drain out		PA100-050	Maintaining valve insert		PA100-123	Extension filter	
HR101-004	Ogive		PA100-051	Piston maintaining valve		PA100-149	No return valve filter	
HR102-014	Nut fitting pipe		PA100-052	Spring guide		PA114-047	Connection INOX	
HR176-002	Closure plug 1/4''		PA100-053	Closure plug		PA115-116	Spring no return valve	
HR701-012	Washer		PA100-054	Nut		PA115-119	Piston no return valve	
OR002-005	O-ring		PA100-060	Maintaining valve complete		VB008-012	Screw	
OR003-005	O-ring		PA100-201	Filter cartridge - electric		VB008-070	Screw	
OR009-005	O-ring		PA100-202	Filter cartridge - gasoline		VR006-015	Washer spring	
OR009-010	O-ring		PA100-110	Support filter		VV005-015	Sphere	

NARDI COMPRESSORI	**SPARE PARTS** **PACIFIC FILTER 3** ***Filter Housing PAC FILTER 3***	PA100-382 Rev.01 Date 02/05/2013

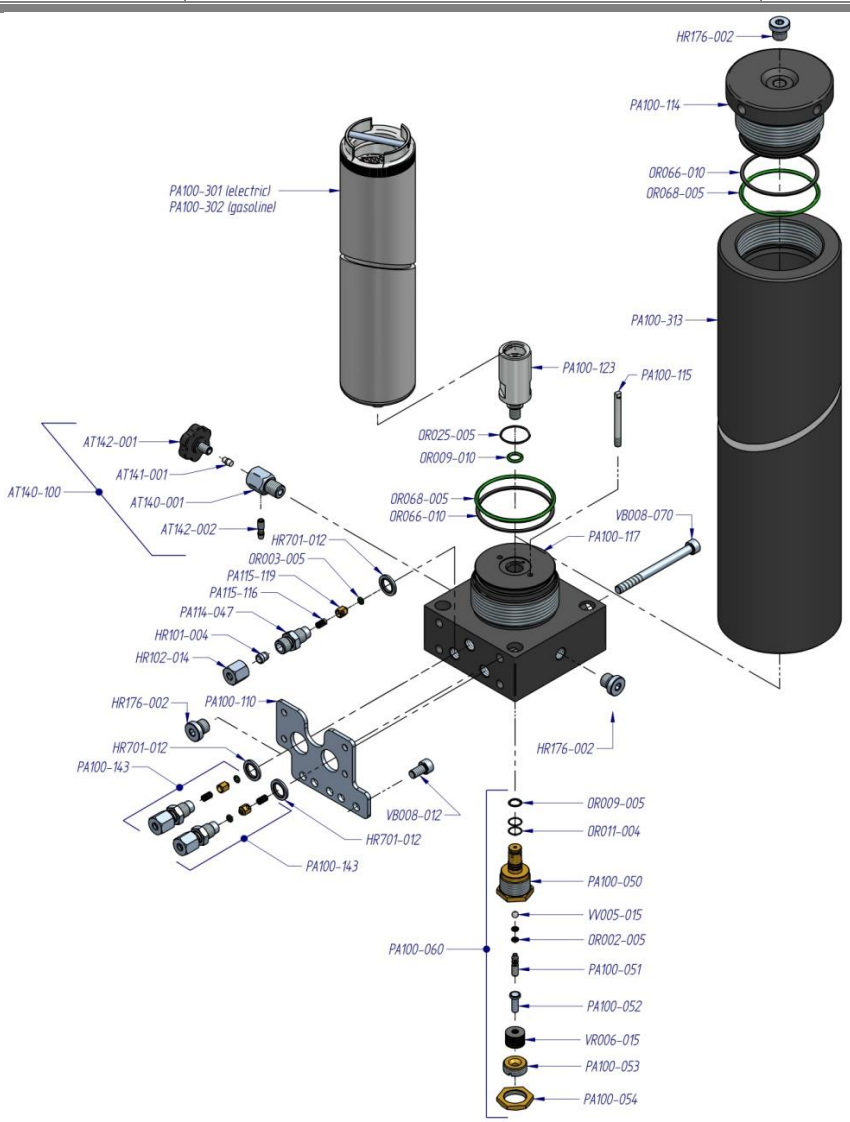

CODE	DESCRIPTION		CODE	DESCRIPTION		CODE	DESCRIPTION	
AT140-001	Drain valve housing		OR011-004	O-ring		PA100-313	Filter housing	
AT140-100	Condensate drain valve complete		OR025-005	O-ring		PA100-114	Head filter housing	
AT141-001	Rilsan nut		OR066-010	O-ring		PA100-115	Nozzle	
AT142-001	Black screw of discharge		OR068-005	O-ring		PA100-117	Base filter	
AT142-002	Drain out		PA100-050	Maintaining valve insert		PA100-123	Extension filter	
HR101-004	Ogive		PA100-051	Piston maintaining valve		PA100-149	No return valve filter	
HR102-014	Nut fitting pipe		PA100-052	Spring guide		PA114-047	Connection INOX	
HR176-002	Closure plug 1/4''		PA100-053	Closure plug		PA115-116	Spring no return valve	
HR701-012	Washer		PA100-054	Nut		PA115-119	Piston no return valve	
OR002-005	O-ring		PA100-060	Maintaining valve complete		VB008-012	Screw	
OR003-005	O-ring		PA100-301	Filter cartridge - electric		VB008-070	Screw	
OR009-005	O-ring		PA100-302	Filter cartridge - gasoline		VR006-015	Washer spring	
OR009-010	O-ring		PA100-110	Support filter		VV005-015	Sphere	

NARDI COMPRESSORI	**SPARE PARTS** **PACIFIC 27** ***Filling Valve 300 Bar – 4700 psi***	PA112-003 Rev.00 Date 12/02/2011

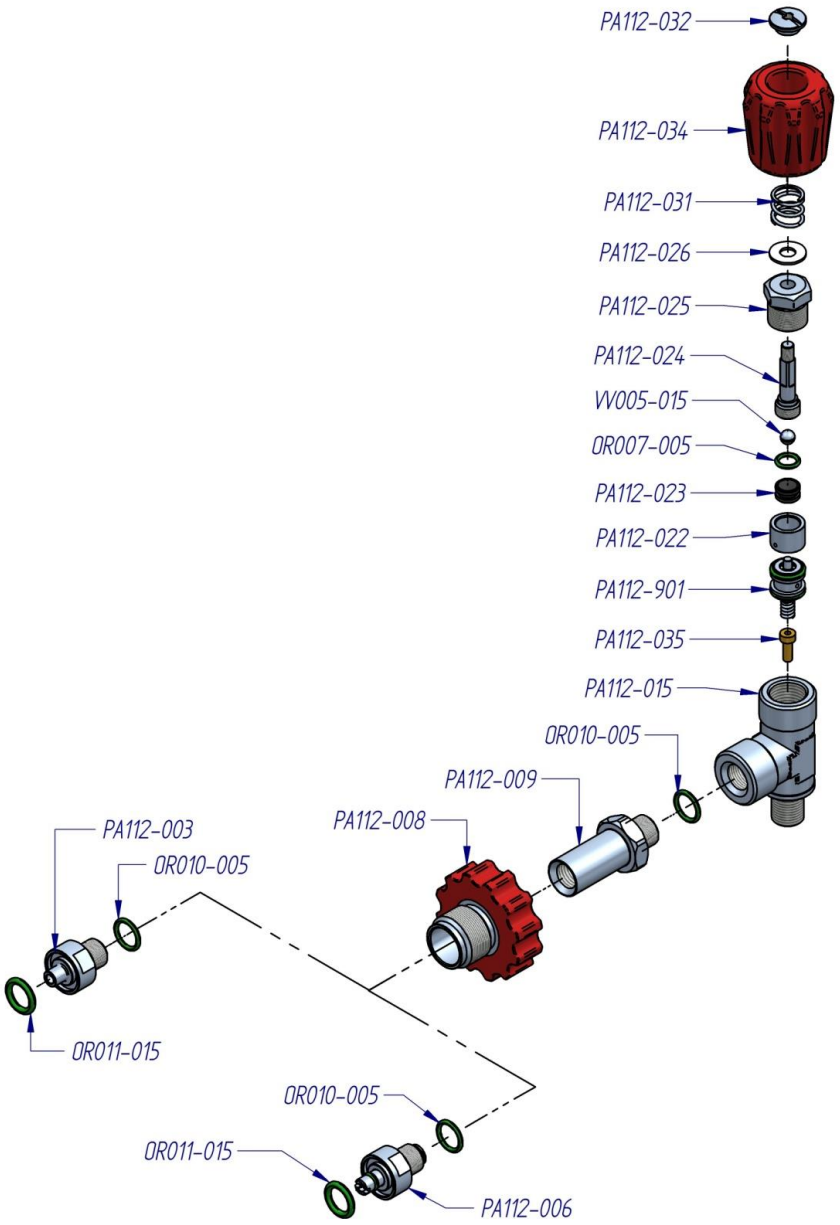

CODE	DESCRIPTION		CODE	DESCRIPTION		CODE	DESCRIPTION	
OR007-005	O-ring		PA112-015	Body valve		PA112-032	Nut	
OR010-005	O-ring		PA112-022	Cylindrical guide		PA112-034	Rubber knob red 300 bar	
OR011-015	O-ring		PA112-023	Piston valve insert		PA112-035	Filter	
PA112-003	Fitting connection 300 BAR		PA112-024	Valve shaft		PA112-901	Kit pressure valve	
PA112-006	Fitting connection 300 BAR flow stop		PA112-025	Closure nut		VV005-015	Sphere	
PA112-008	Knob DIN 300 red		PA112-026	Washer				
PA112-009	Knob guide DIN		PA112-031	Spring				

NARDI COMPRESSORI	**SPARE PARTS** **PACIFIC 27** ***Filling Valve 200 Bar – 3000 psi***	PA112-004 Rev.00 Date 12/02/2011

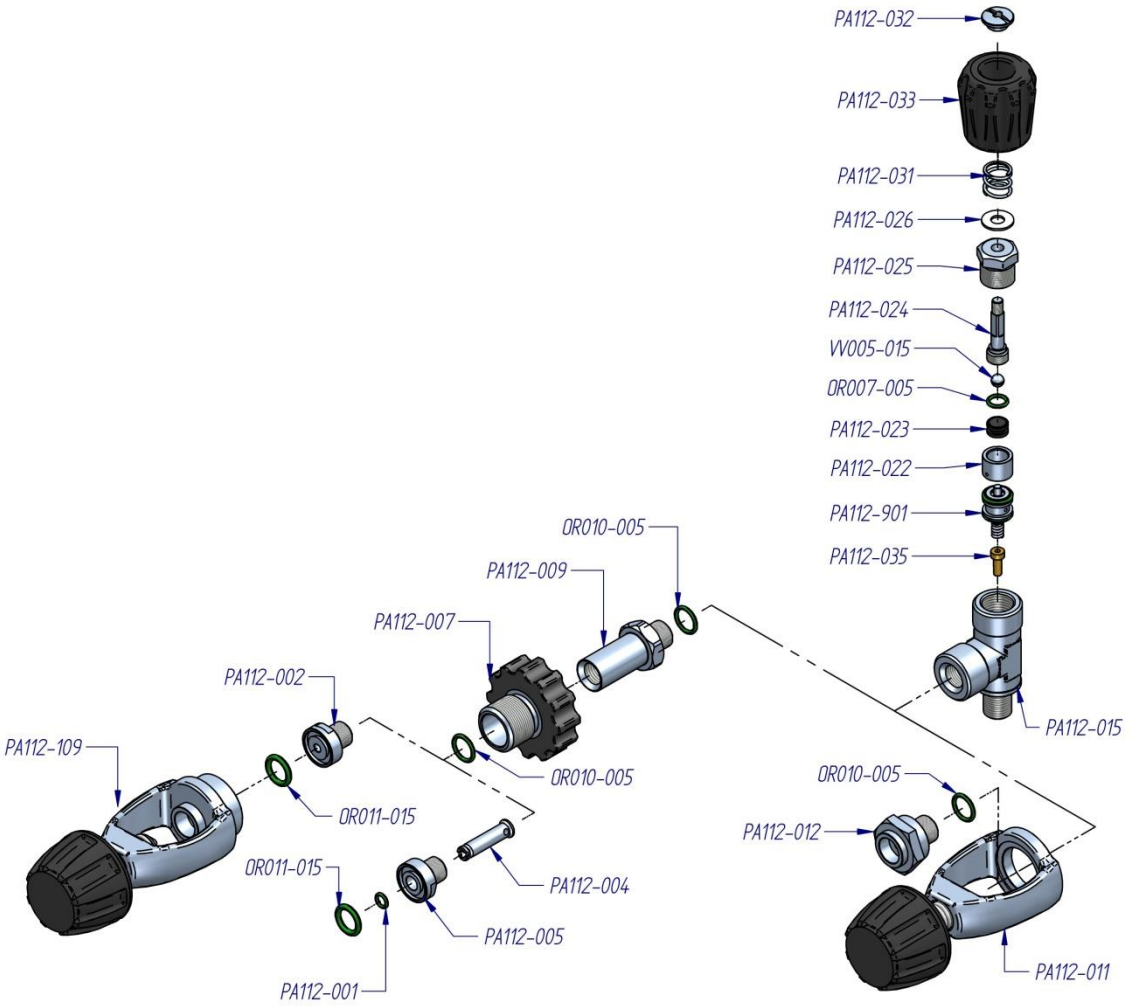

CODE	DESCRIPTION		CODE	DESCRIPTION		CODE	DESCRIPTION	
OR007-005	*O-ring*		PA112-012	*Bracket blocks INT-CGA*		PA112-032	*Nut*	
OR010-005	*O-ring*		PA112-015	*Body valve*		PA112-033	*Rubber knob black 200 bar*	
OR011-015	*O-ring*		PA112-022	*Cylindrical guide*		PA112-035	*Filter*	
PA112-002	*Fitting connection 200 BAR*		PA112-023	*Piston valve insert*		PA112-109	*International connection INT-CGA*	
PA112-005	*Fitting connection 200 BAR flow stop*		PA112-024	*Valve shaft*		PA112-901	*Kit pressure valve*	
PA112-007	*Knob DIN 200 black*		PA112-025	*Closure nut*		VV005-015	*Sphere*	
PA112-009	*Knob guide DIN 200*		PA112-026	*Washer*				
PA112-011	*International connection INT-CGA*		PA112-031	*Spring*				

NARDI COMPRESSORI	**SPARE PARTS** **PACIFIC 27** ***Filling Devices with Connections***	PA114-003 Rev.00 Date 24/04/2013

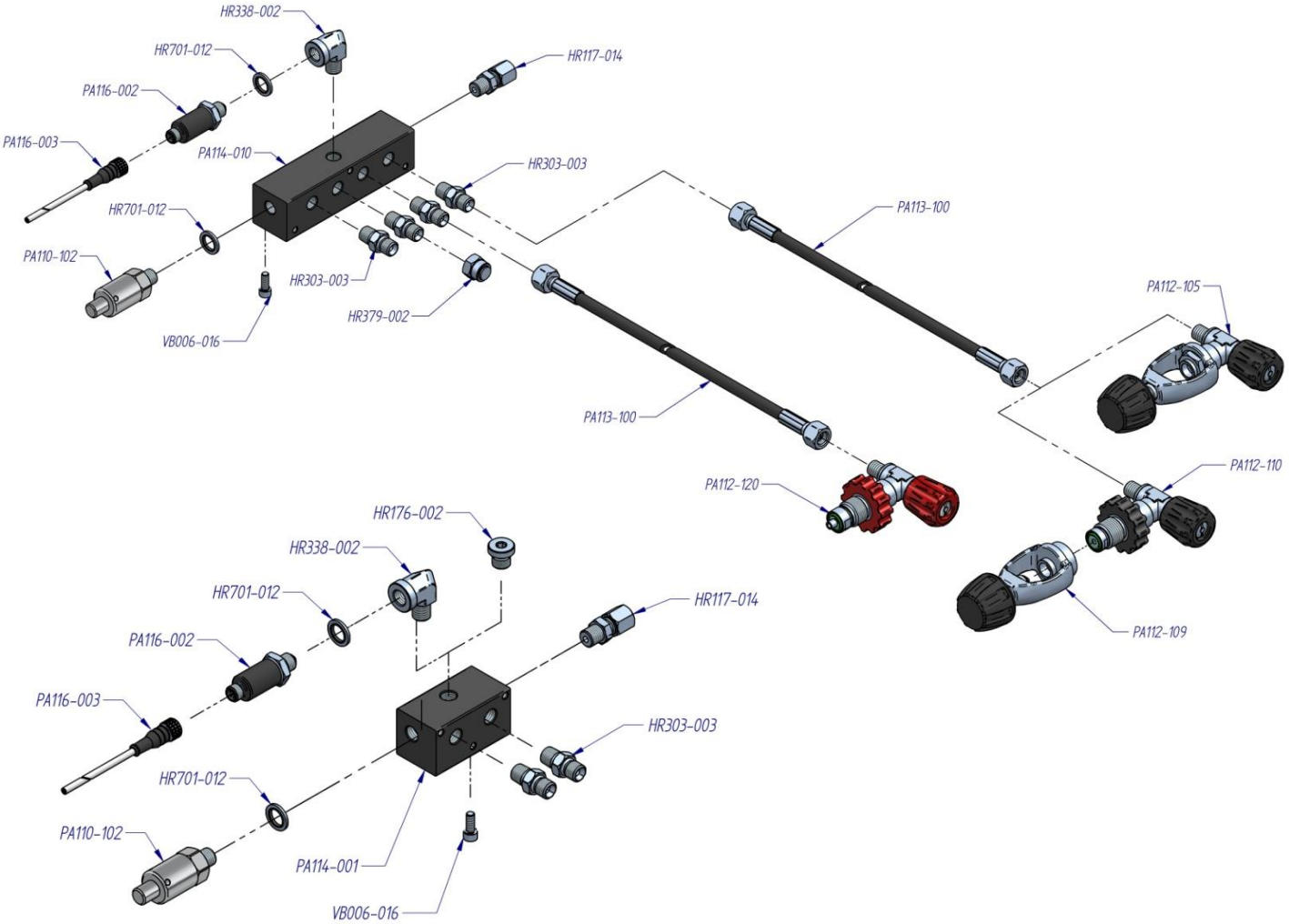

CODE	DESCRIPTION	CODE	DESCRIPTION	CODE	DESCRIPTION
HR117-014	Pipe fitting straight ¼" for tube 6mm	**PA110-102**	Safety Valve PN 200	**PA113-100**	Filling Hose 1/4'' G straight fpr breathing air
HR176-002	Plug 1/4'' G	**PA110-103**	Safety Valve PN 300	**PA114-001**	Filling Device 2 Fold
HR303-003	Connector straight 1/4'' G – Filling hose	**PA112-109**	International Connection DIN – YOKE/INT	**PA114-010**	Filling Device 4 Fold
HR338-002	Connector L-Shaped 1/4'' G Male + 1/4''G Female	**PA112-105**	Filling Valve YOKE/INT 200	**PA116-002**	Pressure Transducer HP
HR379-002	Closing Plug 1/4'' G	**PA112-110**	Filling Valve DIN 200	**PA116-003**	Cable connection pressure transducer
HR701-012	Washer 1/4'' G	**PA112-120**	Filling Valve DIN 300	**VB006-016**	Screw

NARDI COMPRESSORI	**SPARE PARTS** **PACIFIC 27** ***Automatic Condensate Drain***	PA114-015 Rev.01 Date 12/02/2011

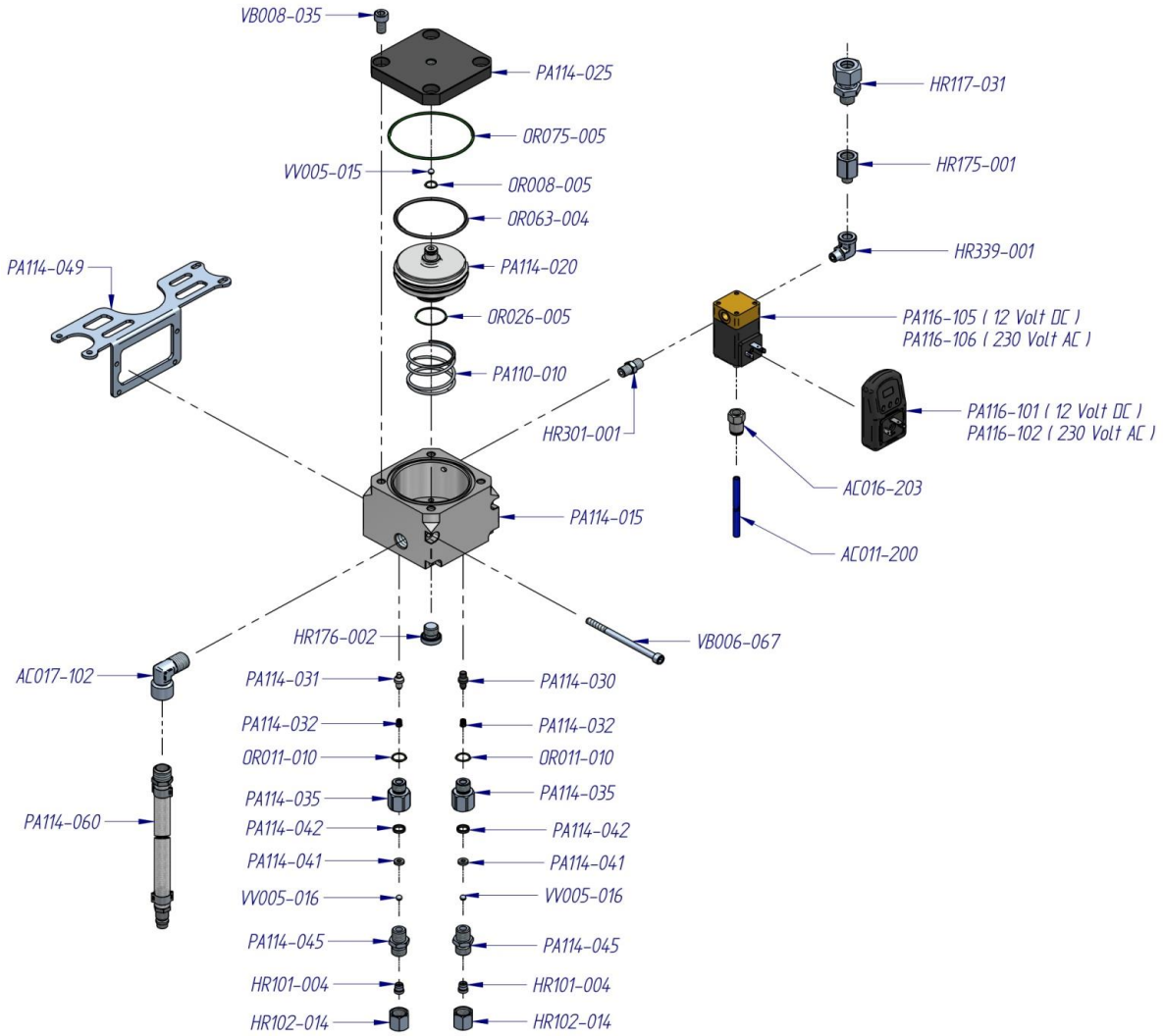

CODE	DESCRIPTION		CODE	DESCRIPTION		CODE	DESCRIPTION	
AC011-200	Rilsan Tube		OR063-004	O-ring		PA114-049	Support Condensate Drain	
AC016-203	Connection		OR075-005	O-ring		PA114-060	Hose with fittings for collecting vessel	
AC017-102	Pipe Fitting "L"		PA110-010	Spring		PA116-101	Timer drain 12 Volt DC	
HR101-004	Ogive		PA114-015	Drain valve body		PA116-102	Timer drain 230 Volt AC	
HR102-014	Nut fitting pipe		PA114-020	Drain valve piston		PA116-105	Solenoid valve 12 Volt DC	
HR117-031	Pipe fitting 1/4"G for tube 12 mm		PA114-025	Top flange		PA116-106	Solenoid valve 230 Volt AC	
HR175-001	Connection		PA114-030	Piston HP		VB006-067	Screw	
HR176-002	Closure plug 1/4"G		PA114-031	Piston LP		VB008-035	Screw	
HR301-001	Nipple		PA114-032	Spring		VV005-015	Washer	
HR339-001	Connection "L"		PA114-035	Drain valve connection		VV005-016	Sphere	
OR008-005	O-ring		PA114-041	Sealing Ring				
OR011-010	O-ring		PA114-042	Reducer				
OR026-005	O-ring		PA114-045	Connection Stainless Steel				

9 MAINTENANCE SCHEDULE TABLE

EVERY **25 HOURS OF OPERATION**	DATE	TECHNICIAN'S SIGNATURE
Clean intake filter of the compressor		
Check oil level of compressor (ideally MAX)		
Check the performance of the filling hoses		
Check the performance of the cooling hoses		
Check instruments (zero on the gauge)		
EVERY **25 HOURS OF OPERATION**	DATE	TECHNICIAN'S SIGNATURE
Clean intake filter of the compressor		
Check oil level of compressor (ideally MAX)		
Check the performance of the filling hoses		
Check the performance of the cooling hoses		
Check instruments (zero on the gauge)		
EVERY **25 HOURS OF OPERATION**	DATE	TECHNICIAN'S SIGNATURE
Clean intake filter of the compressor		
Check oil level of compressor (ideally MAX)		
Check the performance of the filling hoses		
Check the performance of the cooling hoses		
Check instruments (zero on the gauge)		
EVERY **25 HOURS OF OPERATION**	DATE	TECHNICIAN'S SIGNATURE
Clean intake filter of the compressor		
Check oil level of compressor (ideally MAX)		
Check the performance of the filling hoses		
Check the performance of the cooling hoses		
Check instruments (zero on the gauge)		
EVERY **25 HOURS OF OPERATION**	DATE	TECHNICIAN'S SIGNATURE
Clean intake filter of the compressor		
Check oil level of compressor (ideally MAX)		
Check the performance of the filling hoses		
Check the performance of the cooling hoses		
Check instruments (zero on the gauge)		
EVERY **25 HOURS OF OPERATION**	DATE	TECHNICIAN'S SIGNATURE
Clean intake filter of the compressor		
Check oil level of compressor (ideally MAX)		
Check the performance of the filling hoses		
Check the performance of the cooling hoses		

Check instruments (zero on the gauge)		
EVERY **25 HOURS OF OPERATION**	DATE	TECHNICIAN'S SIGNATURE
Clean intake filter of the compressor		
Check oil level of compressor (ideally MAX)		
Check the performance of the filling hoses		
Check the performance of the cooling hoses		
Check instruments (zero on the gauge)		
EVERY **25 HOURS OF OPERATION**	DATE	TECHNICIAN'S SIGNATURE
Clean intake filter of the compressor		
Check oil level of compressor (ideally MAX)		
Check the performance of the filling hoses		
Check the performance of the cooling hoses		
Check instruments (zero on the gauge)		
EVERY **25 HOURS OF OPERATION**	DATE	TECHNICIAN'S SIGNATURE
Clean intake filter of the compressor		
Check oil level of compressor (ideally MAX)		
Check the performance of the filling hoses		
Check the performance of the cooling hoses		
Check instruments (zero on the gauge)		
EVERY **25 HOURS OF OPERATION**	DATE	TECHNICIAN'S SIGNATURE
Clean intake filter of the compressor		
Check oil level of compressor (ideally MAX)		
Check the performance of the filling hoses		
Check the performance of the cooling hoses		
Check instruments (zero on the gauge)		
EVERY **25 HOURS OF OPERATION**	DATE	TECHNICIAN'S SIGNATURE
Clean intake filter of the compressor		
Check oil level of compressor (ideally MAX)		
Check the performance of the filling hoses		
Check the performance of the cooling hoses		
Check instruments (zero on the gauge)		
EVERY **50 HOURS OF OPERATION**	DATE	TECHNICIAN'S SIGNATURE
Filter cartridge activated carbon/molecular sieve (PAC FILTER 2)		
Check O-Rings (Filters and cartridge)		
EVERY **50 HOURS OF OPERATION**	DATE	TECHNICIAN'S SIGNATURE

Filter cartridge activated carbon/molecular sieve (PAC FILTER 2)		
Check O-Rings (Filters and cartridge)		
EVERY **50 HOURS OF OPERATION**	DATE	TECHNICIAN'S SIGNATURE
Filter cartridge activated carbon/molecular sieve (PAC FILTER 2)		
Check O-Rings (Filters and cartridge)		
EVERY **50 HOURS OF OPERATION**	DATE	TECHNICIAN'S SIGNATURE
Filter cartridge activated carbon/molecular sieve (PAC FILTER 2)		
Check O-Rings (Filters and cartridge)		
EVERY **50 HOURS OF OPERATION**	DATE	TECHNICIAN'S SIGNATURE
Filter cartridge activated carbon/molecular sieve (PAC FILTER 2)		
Check O-Rings (Filters and cartridge)		
EVERY **50 HOURS OF OPERATION**	DATE	TECHNICIAN'S SIGNATURE
Filter cartridge activated carbon/molecular sieve (PAC FILTER 2)		
Check O-Rings (Filters and cartridge)		
EVERY **50 HOURS OF OPERATION**	DATE	TECHNICIAN'S SIGNATURE
Filter cartridge activated carbon/molecular sieve (PAC FILTER 2)		
Check O-Rings (Filters and cartridge)		
EVERY **50 HOURS OF OPERATION**	DATE	TECHNICIAN'S SIGNATURE
Filter cartridge activated carbon/molecular sieve (PAC FILTER 2)		
Check O-Rings (Filters and cartridge)		
EVERY **50 HOURS OF OPERATION**	DATE	TECHNICIAN'S SIGNATURE
Filter cartridge activated carbon/molecular sieve (PAC FILTER 2)		
Check O-Rings (Filters and cartridge)		
EVERY **50 HOURS OF OPERATION**	DATE	TECHNICIAN'S SIGNATURE
Filter cartridge activated carbon/molecular sieve (PAC FILTER 2)		
Check O-Rings (Filters and cartridge)		
EVERY **50 HOURS OF OPERATION**	DATE	TECHNICIAN'S SIGNATURE
Filter cartridge activated carbon/molecular sieve (PAC FILTER 2)		
Check O-Rings (Filters and cartridge)		
EVERY **50 HOURS OF OPERATION**	DATE	TECHNICIAN'S SIGNATURE
Filter cartridge activated carbon/molecular sieve (PAC FILTER 2)		

Check O-Rings (Filters and cartridge)		
EVERY **50 HOURS OF OPERATION**	DATE	TECHNICIAN'S SIGNATURE
Filter cartridge activated carbon/molecular sieve (PAC FILTER 2)		
Check O-Rings (Filters and cartridge)		
EVERY **50 HOURS OF OPERATION**	DATE	TECHNICIAN'S SIGNATURE
Filter cartridge activated carbon/molecular sieve (PAC FILTER 2)		
Check O-Rings (Filters and cartridge)		
EVERY **50 HOURS OF OPERATION**	DATE	TECHNICIAN'S SIGNATURE
Filter cartridge activated carbon/molecular sieve (PAC FILTER 2)		
Check O-Rings (Filters and cartridge)		
EVERY **250 HOURS OF OPERATION**	DATE	TECHNICIAN'S SIGNATURE
Replace cartridge of intake filter		
Inspection of body and base of filter activated carbon		
EVERY **250 HOURS OF OPERATION**	DATE	TECHNICIAN'S SIGNATURE
Replace cartridge of intake filter		
Inspection of body and base of filter activated carbon		
EVERY **250 HOURS OF OPERATION**	DATE	TECHNICIAN'S SIGNATURE
Replace cartridge of intake filter		
Inspection of body and base of filter activated		

carbon		
EVERY **250 HOURS OF OPERATION**	DATE	TECHNICIAN'S SIGNATURE
Replace cartridge of intake filter		
Inspection of body and base of filter activated carbon		
EVERY **250 HOURS OF OPERATION**	DATE	TECHNICIAN'S SIGNATURE
Replace cartridge of intake filter		
Inspection of body and base of filter activated carbon		
EVERY **250 HOURS OF OPERATION**	DATE	TECHNICIAN'S SIGNATURE
Replace cartridge of intake filter		
Inspection of body and base of filter activated carbon		
EVERY 500 HOURS OF OPERATION OR ANNUALLY	DATE	TECHNICIAN'S SIGNATURE
Contact the technician of Nardi Compressori		
Inspection and replacement of filter of last separator		
Oil change		

Check setting of safety valve		
EVERY 500 HOURS OF OPERATION OR ANNUALLY	DATE	TECHNICIAN'S SIGNATURE
Contact the technician of Nardi Compressori		
Inspection and replacement of filter of last separator		
Oil change		
Check setting of safety valve		

EVERY **1,000 HOURS OF OPERATION**	DATE	TECHNICIAN'S SIGNATURE
Contact the technician of Nardi Compressori		
Replacement of valves		
EVERY **1,000 HOURS OF OPERATION**	DATE	TECHNICIAN'S SIGNATURE
Contact the technician of Nardi Compressori		
Replacement of valves		
EVERY **1,000 HOURS OF OPERATION**	DATE	TECHNICIAN'S SIGNATURE
Contact the technician of Nardi Compressori		
Replacement of valves		

ANNUALLY OR AS REQUESTED	DATE	TECHNICIAN'S SIGNATURE
Contact the technician of Nardi Compressori		
Test the quality of the air with aero-test kit or similar		
Oil change		
Check setting of automatic stop system and safety valve		
AFTER REPAIRS	DATE	TECHNICIAN'S SIGNATURE
Check performance of filling connectors		
Clean intake filter		
Check hoses and fittings of intercooling		
AFTER A LONG PERIOD OF INACTIVITY	DATE	TECHNICIAN'S SIGNATURE
Check performance of filling connectors		
Clean intake filter		
Check instruments (zero on the gauge)		